aumüller

Assembly and Commissioning Instructions

according to Machinery Directive 2006/42/EC (annex VI)

KS2 / KS2 Twin - Chain Drive for windows CE

TÜV NORD
TÜV NORD CERT GmbH
Type Tested

01		Abbreviations Target Groups Warning and Safety Symbols Intended Use Safety Instructions	3 - 8
02		Data sheet KS2 S2 24V DC R/L / KS2 S2 230V AC R/L Data sheet KS2 S12 24V DC R / KS2 S12 24V DC L Data sheet KS2 S12 230V AC R / KS2 S12 230V AC L Data sheet KS2 TWIN S12 24V DC Data sheet KS2 S12 230V AC TANDEM-SET	9 - 21
03		Drive positioning: Symmetrical or asymmetrical Survey: Growing variants and minimum casement heights Possible multi-drive operating	22 - 24
04	INSTALLATION STEP 1: INSTALLATION STEP 2:	Inspection before the installation Installation prerequisite and Installation preparation	25 - 26
05	INSTALLATION STEP 3: INSTALLATION STEP 4: INSTALLATION STEP 5: INSTALLATION STEP 6: INSTALLATION STEP 7:	Determine the casement brackets Determine the frame brackets (Application examples) Hole layout for frame bracket and casement bracket Assembly casement bracket Assembly frame bracket	27 - 57
06	INSTALLATION STEP 8:	Concealing the drive	58 - 62
07	INSTALLATION STEP 9: INSTALLATION STEP 10: INSTALLATION STEP 11:	Electric Connection Instructions on Connection Supply lines of drives to the control unit Safety check and Test run Troubleshooting, Service and Repair Maintenance and Modification	63 - 67
08		Removal and Disposal Liability Warranty and After-Sales Service	68

Abbreviations

Index of abbreviations	
These abbreviations are used consistently throughout these assembly & operating instructions. Unless stated differently, all dimensions indicated in this document are in mm. General tolerances in accordance with DIN ISO 2768-m.	
A	drive
AK	connection cable / drive cable
AP	cover cap
BD	hinge
Fxxx	casement bracket
FAB	overall width of casement
FAH	overall height of casement
FG	casement weight
FL	casement
FÜ	casement overlap
HSK	main closing edge
Kxxx	frame bracket
L	construction lenghth of drive
MB	central hinge
NSK	side closing edge
RA	frame
RAB	overall width of frame
RAH	overall height of frame
SL	snow load
→	opening direction

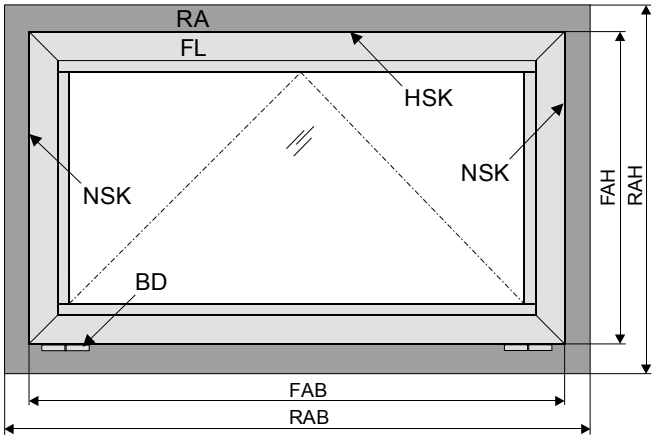

Target group

These instructions are intended for trained personnel and operators of systems for natural smoke ventilation (NRA / SHEV) (natural smoke exhaust system / smoke and heat exhaust system) and natural ventilation via windows, who are knowledgeable of operating modes as well as the remaining risks of the system.

Warning and safety symbols in these Instructions:

The symbols used in the instructions shall be strictly observed and have the following meaning:

⚠ Danger Failure to comply with the warning notes results in irreversible injuries or death.

⚠ Warning Failure to comply with the warning notes can result in irreversible injuries or death.

⚠ Caution Failure to comply with the warning notes can result in minor or moderate (reversible) injuries.

Note Failure to comply with the warning notes can lead to damage to property.

Caution / Warning
Danger due to electric current.

Caution / Warning
Risk of crushing and entrapment during device operation (is provided as a sticker with the drive).

Attention / Warning
Risk of damage to / destruction of drives and / or windows.

⚠ Warning Once the assembly and commissioning has been completed, the installer of a machine „power-operated window and door" shall hand these instructions over to the end-user. The end-user shall store these instructions in a safe place for further reference and use, if required.

⚠ Warning This device is not intended for use by persons (including children) with physical, sensory or mental limitations or lacking experience and / or knowledge, unless they are supervised by a person who is responsible for the safety or were instructed by him on the usage of this equipment. Children should be supervised to ensure that they are not playing with this device.
Cleaning and operator's maintenance may not be performed by children without supervision.

INTENDED USE

Area of application / Scope of application

This drive is intended for the electromotive opening and closing of windows in facade and roof areas.

The main task of this product, in combination with a window and a suitable external control unit, **is to evacuate hot smoke and combustion gases in case of fire**, to safe human lives and protect material assets. Furthermore, with the electromotive operated window and a suitable external control unit, **the natural ventilation** of the building can be ensured.

NOTE

By attaching the drive to a movable element of the window a so-called "power-operated window" is created which, according to the Machinery Directive 2006 / 42 / EG, represents a machine.

Intended use according

The drive is intended for stationary installation and electrical connection at the window as part of a building.

The drive is in combination with an external Control Unit (e.g. from **AUMÜLLER**) released for its proper use at a power-operated window for the following use:

- Application for natural ventilation
  - with an installation height of the drive and the bottom side of sash of at least 2,5 m above the floor, **or**
  - with an opening width at the HSK of the driven part of < 200 mm by a simultaneous speed of < 15 mm/s at the HSK in closing direction.
- Application as NSHEV (natural smoke and heat exhaust ventilator(s) for ventilation without dual purpose for ventilation in accordance with EN12101-2.

⚠ WARNING

Pay attention to possible hazards on tilting or rotating windows, whose secondary closing edges are located at less than 2,5 m installation height above the floor, under consideration of the Control Unit and usage!

We as manufacturers are well aware of our duties and responsibilities regarding the development, manufacturing and placing of safe window drives on the market and consistently implement them. Ultimately, however, we have no direct influence on the usage of our drives. Therefore, as a precaution, we point out the following:

- The **constructor or his agent** (architect, specialist planner) **are obligated to evaluate the hazards to persons**, outgoing from the usage, installation position, opening parameters and from the external Control Unit of the power operated window, already **in the planning phase and to establish necessary protective measures**.
- The **constructor / manufacturer** of the machine "power-operated window" **must implement** the planned **protective measures** at the installation site or, if not yet established, **determine them** by it´s own responsibility and detect or **minimize possible remaining risks**.

The need for a risk assessment at the installation site due to the reasonably foreseeable misuse.

A risk assessment in accordance with the Machinery Directive 2006 / 42 / EG for the usage of the power-operated window **for natural ventilation is absolutely necessary** under the following conditions:

- the installation height of the drive and lower edge of casement < 2,5 m above the floor
  and one of the following conditions:
- the opening width at the HSK > 200 mm, **or**
- the closing speed at the HSK is > 15 mm/s, **or**
- the opening speed at the HSK is > 50 mm/s, **or**
- the closing force at the HSK is > 150 N

The following flow chart can be applied, which also includes the protective measures in accordance with EN 60335-2-103/2016-05.

Snow load on roof windows for SHEV-systems

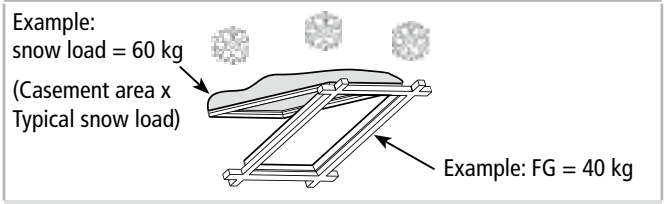

Example calculation

Establish snow loading based on national standards /directives (in Germany according to DIN 1055-5)
total weight = FG + snow load
total weight = (40 kg + 60 kg) = 100 kg

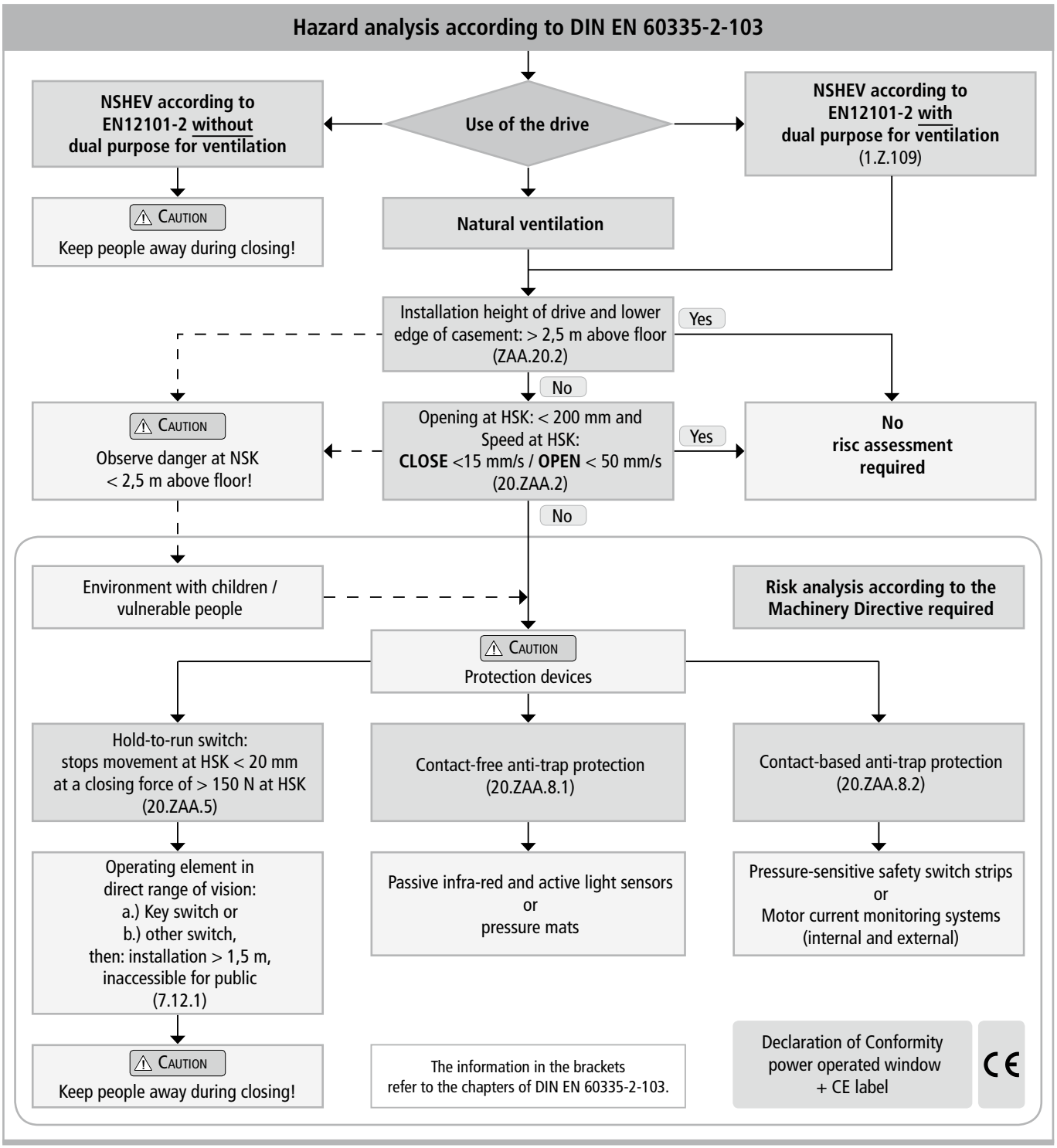

Casement data

Facade:	bottom-hung window / top-hung window / side hung window
Roof:	roof window / sky light
Opening direction:	inward opening / outward opening
Profile material:	aluminum, steel, plastic or wood.

NOTE

The casement measurements supplied are only for orientation purposes.
It is imperative that the **force-path diagram** of the drives are observed.

When inspecting the drives for conformity with on-site requirements the following items must be observed:

- total weight of casement (glass + frame),
- additional loads: snow load / wind load (suction / pressure),
- casement size (FAB x FAH),
- side ratio FAB / FAH,
- installation / inclination angle,
- required opening area (geometric / aerodynamic),
- crosswind influences,
- driving force and stroke,
- mounting site at the window frame and casement frame.

SAFETY INSTRUCTIONS

⚠ WARNING

It is important to follow these instructions for the safety of persons. These instructions shall be kept in a safe place for the entire service life of the products.

Risk of crushing and entrapment!
Window can close automatically!

The integrated load cut-off stops the drive during closing and opening when the drive is overloaded.
The compressive force is absolutely sufficient to crush fingers in case of carelessness.

Area of application

The drive shall only be used according to its intended use. For additional applications consult the manufacturer or his authorized dealer.

⚠ WARNING

Do not misuse the drive for other lifting operations! Do not allow children to play with this drive or its regulating and / or control units, including the remote control!

Always check whether the system complies with current regulations. Special attention must be paid to the opening width, the opening area, the opening time and the opening speed of the window, the temperature range of the drives / external devices and cables as well as the cross section of the connecting cables as function of the cable length and power consumption.

All devices must be permanently protected from dirt and moisture, if the drive is not explicitly suitable for use in wet areas (see technical data).

Installation

These instructions address expert and safety-conscious electricians and / or qualified personnel knowledgeable in electrical and mechanical drive installation.

NOTE

The safe operation, avoidance of injury to persons and damage to property, as well as risks, is only guaranteed by proper installation and setting according to these installation instructions.

All specifications for installation must be checked independently and, if necessary, adjusted at the installation site. The connection assignment, the electrical supply data (see machine plate) and performance limits (see technical data) as well as the mounting and installation instructions of the drive must be strictly observed and adhered to!

Never connect 24 V DC drives to 230 V AC mains voltage!
Danger to life!

Do not reach into the window rabbet or the operating element (chain or spindle) during installation and operation! Ensure that, based on the installation position and the opening movement of the casement, persons cannot be trapped between the driven part of the window and surrounding fixed components (e.g. wall).

Mounting material

The required mounting material must to fit with the drive and occurring load and, if necessary, supplemented.

NOTE

Before installing the drive, check whether the casement is in good mechanical condition, the weight in balance and whether it opens and closes easily!

Danger spots by crush and shear points

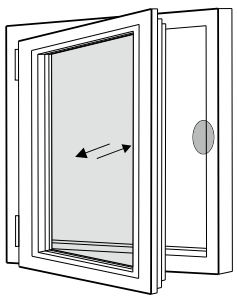

Side-hung

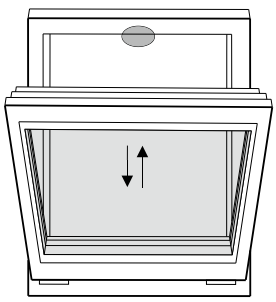

Bottom-hung

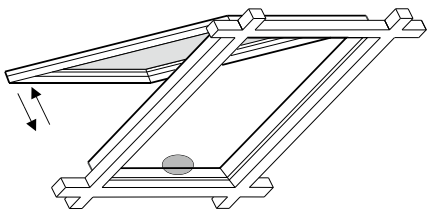

Roof windows / skyskylight domes

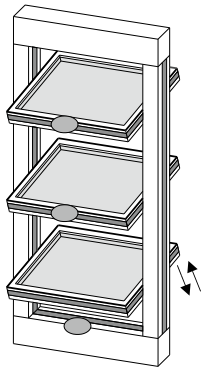

Louvre windows

Danger spots: crush and shear points according to DIN EN 60335-2-103

Crush and shear points
To avoid injuries, **crushing and shear points** between casement and frame must be secured **against entrapment up to an installation height of 2,5 meters above the floor** with appropriate measures. This can be achieved e.g. by using contact-based or contactless protective devices against entrapment, which stop the motion through contact or through interruption by a person. At a force higher than 150 N at the main closing edge the motion must stop within 20 mm. A warning symbol at the opening element must indicate this clearly.

Unintentional or independent opening or falling
Casements are to be hinged or secured such way that in case one of the mounting elements fails it will not crash / slam down or move in an uncontrolled manner by e.g. using double suspensions, safety scissors, casement stays.
Tilting windows shall be equipped with safety scissors or similar devices to avoid damages and risks of injury for persons through improper installation and operation. The safety scissors must be adjusted to the opening stroke of the drive (see technical data) to avoid blocking. The opening width of the safety scissors must be bigger than the drive stroke.

⚠ **Warning** The movable casement must be secured against unintentional or independent opening as well as falling down.

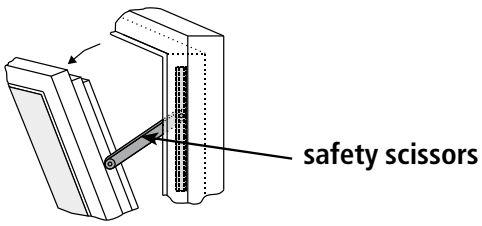

Routing cables and electrical connection
Routing or installing of electrical cables and connections may be performed only by specialist companies. Never operate drives, control units, operating elements and sensorsat operating voltages and connections contrary to the specifications of the manufacturer.
All relevant instructions shall be observed for the installation, specifically:
- VDE 0100 Setting up high-voltage systems up to 1000 V
- VDE 0815 Wiring cables
- Specimen Guideline on Conduits German designation (MLAR).

All-pole disconnecting devices shall be installed in the permanent electrical installation or external Control Unit for the drive.
The mains supply lines 230 V / 400 V AC shall be protected separately!

24V DC drives may only be connected to power supply sources that comply with SELV specifications.

Note In the case of tandem / multiple operation of drives connected in series, the cross-section of the connection cable must be checked autonomously, depending on the total current consumption of the drive system.

⚠ **Warning** Damaged mains supply lines of drives with plug connectors may only be replaced by the manufacturer or qualified service / maintenance personnel!
Power cables which are fixed to the drive casing cannot be replaced. If the cable is damaged the device must be scrapped!

The types of cable, cable lengths and cross-sections shall be selected in accordance with the manufacturer's technical data. If necessary, the cable types shall be coordinated with the competent local authorities and energy supply companies. Low-voltage lines (24 V DC) shall be routed separate from the high-voltage lines. Flexible cables may not be flush-mounted. Freely suspended cables shall be equipped with strain reliefs.

Cables must be laid such way that they cannot be sheared off, twisted or bent during operation. Drive cables laid inside window profiles must be protected by insulating tubes with a sufficient temperature resistance. Through holes shall be equipped with cable sleeves!

Clamping points shall be checked for tightness of threaded connections and cable ends. Access to junction boxes, clamping points and external drive control boxes shall be ensured for maintenance work.

Commissioning, operation and maintenance
After the installation and after each modification in the set up all functions shall be checked with a trial run. It shall be ensured that drive and casement are set correctly and that security systems, if available, are functioning properly. **After the installation of the system is completed the end-user shall be introduced to all important operating steps.** If necessary, he must be advised of all remaining risks / dangers.
The end-user shall be specifically instructed that no additional forces, except pushing and pulling forces in the opening and closing direction of the casement, may be applied to the spindle, chain or lever of the drive.

NOTE Post warning signs!

During cleaning and maintenance works and while exchanging parts, all poles of the drive must be disconnected from the power supplyand and secured against unintentional reactivation.

⚠ **CAUTION** Other persons must be kept away from the casement when a hold-to-run switch (pushbutton) is operated or when a window, which has been opened by a smoke and heat exhaust system, is closing!

⚠ **CAUTION** The operating element of hold-to-run switches must be installed within direct view from the window, but apart from moving elements. If the switch is not a key-operated switch it must be installed at a minimum height of 1,5 m and inaccessible to the public!

⚠ **CAUTION** Do not allow children to play with permanently mounted control devices and keep remote controls out of reach for children!

During cleaning, maintenance work and while exchanging parts the drive must be completely disconnected from the power supply and secured against unintentional reactivation.

⚠ **WARNING** Do not actuate the drive or the casement when repair or re-setting works are performed!

Replacement parts, fasteners and controls
The drive shall only be operated with control devices from the same manufacturer. There is no liability, warranty or customer service if third-party parts are used. Exclusively original replacement parts of the manufacturer shall be used for mounting elements or expansions.

Ambient conditions
The product may not be subjected to impacts or falls, or to vibrations, moisture, aggressive vapors or other harmful environments, unless the manufacturer released it for one or more of these environmental conditions.

- **Operation:**
  Ambient temperature: -5 °C … +60°C
  Relative humidity: < 90% less 20°C;
  < 50% less 40°C;
  no formation of condensation

NOTE Observe temperature range during installation!

- **Transport / Storage:**
  Storage temperature: -5°C … +40°C
  Relative humidity: < 60%

Accident prevention regulations and workmen's compensation insurance guidelines
For work on or in a building or building part the provisions and instructions of the respective accident prevention regulations (local workmen's compensation insurance guidelines) shall be observed and adhered to.

Declaration of Conformity and of Incorporation
The drive is manufactured and inspected in accordance with European guidelines. The respective Declaration of Conformity and of Incorporation is on hand.
In case that the use of the drive differs from the intended use, a risk evaluation for the power operated window shall be performed and a Declaration of Conformity according Machinery Directive 2006 / 42 / EG issued.

DATA SHEET KS2 S2 24V DC R/L

24V

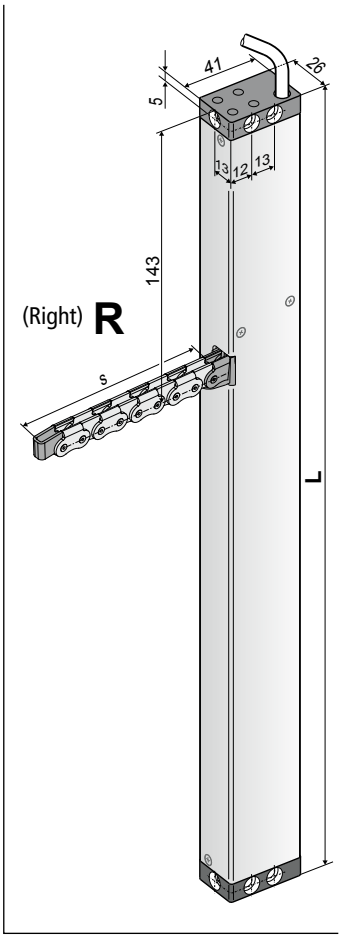

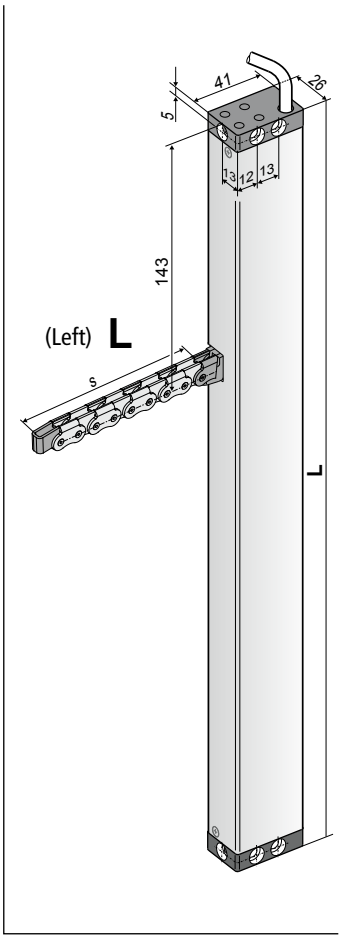

- Application: Natural ventilation as single-drive
- Internal load dependend cut-off switch S2 in OPEN / CLOSE direction

TÜV NORD CERT GmbH – Type Tested

TECHNICAL DATA

U_N	Rated voltage	24V DC (19 V ... 28 V)
I_N	Rated current	0,5 A
I_A	Cut-off current	0,7 A
P_N	Rated power	12 W
DC	Duty cycle	5 cycles (ED 30 % - ON: 3 min. / OFF: 7 min.)
	Protection rating	IP 32
	Ambient temperature range	-5 °C ... +60 °C
F_Z	Pulling force max.	200 N
F_A	Pushing force	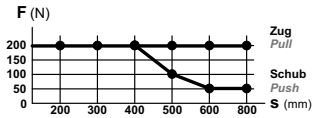 s > 600 mm only for pulling application
F_H	Pullout force	1.800 N (fastening depended)
	Chain	Stainless steel, without protruding rivet heads. Simple connection to casement brackets. Small bending radii allow maximum opening angles of small windows.
	Connecting cable	non-halogen, grey 3 x 0,5 mm², ~ 3 m
v	Speed	10,0 mm/s 10,0 mm/s
s	Stroke	50 – 800 mm
L	Length	see order data
	Sound pressure level A	≤ 70 dB (A)

Order Data

s [mm]	L [mm]	Version	Finish	PU/pcs.	Part.-No.
200	335	KS2 200 S2 24V R (rechts)	E6/C-0	1	**521120**
		KS2 200 S2 24V L (links)	E6/C-0	1	**521420**
300	380	KS2 300 S2 24V R (rechts)	E6/C-0	1	**521130**
		KS2 300 S2 24V L (links)	E6/C-0	1	**521430**
400	430	KS2 400 S2 24V R (rechts)	E6/C-0	1	**521140**
		KS2 400 S2 24V L (links)	E6/C-0	1	**521440**
500	545	KS2 500 S2 24V R (rechts)	E6/C-0	1	**521150**
		KS2 500 S2 24V L (links)	E6/C-0	1	**521450**
600	545	KS2 600 S2 24V R (rechts)	E6/C-0	1	**521160**
		KS2 600 S2 24V L (links)	E6/C-0	1	**521460**
800	625	KS2 800 S2 24V R (rechts)	E6/C-0	1	**521180**
		KS2 800 S2 24V L (links)	E6/C-0	1	**521480**

DATA SHEET KS2 S2 230V AC R/L

230V

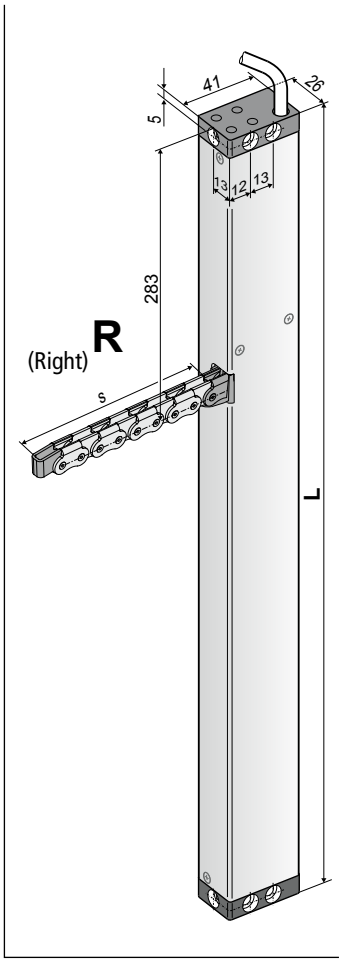

- Application: Natural ventilation as single-drive
- Internal load dependend cut-off switch S2 in OPEN / CLOSE direction
- Parallel connection up to 8 drives in one group

TECHNICAL DATA

U_N	Rated voltage	230V AC (50 Hz)
I_N	Rated current	0,13 A
I_A	Cut-off current	0,2 A
P_N	Rated power	30 W
DC	Duty cycle	5 cycles (ED 30 % - ON: 3 min. / OFF: 7 min.)
	Protection rating	IP 32
	Ambient temperature range	-5 °C ... +60 °C
F_Z	Pulling force max.	200 N
F_A	Pushing force	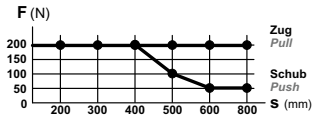 s > 600 mm only for pulling application
F_H	Pullout force	1.800 N (fastening depended)
	Chain	Stainless steel, without protruding rivet heads. Simple connection to casement brackets. Small bending radii allow maximum opening angles of small windows.
	Connecting cable	non-halogen, grey 6 x 0,75 mm², ~ 3 m
v	Speed	10,0 mm/s 10,0 mm/s
s	Stroke	50 – 800 mm
L	Length	see order data
	Sound pressure level A	≤ 70 dB (A)

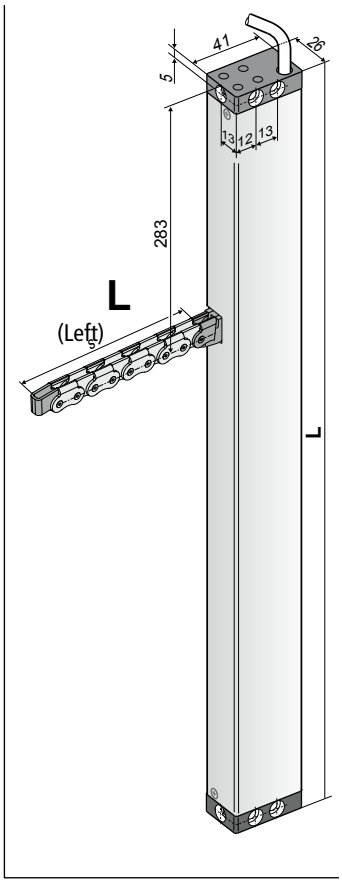

Order Data

s [mm]	L [mm]	Version	Finish	PU/pcs.	Part.-No.
200	475	KS2 200 S2 230V R (rechts)	E6/C-0	1	**494920**
		KS2 200 S2 230V L (links)	E6/C-0	1	**494720**
300	520	KS2 300 S2 230V R	E6/C-0	1	**494930**
		KS2 300 S2 230V L	E6/C-0	1	**494730**
400	570	KS2 400 S2 230V R	E6/C-0	1	**494940**
		KS2 400 S2 230V L	E6/C-0	1	**494740**
500	685	KS2 500 S2 230V R	E6/C-0	1	**494950**
		KS2 500 S2 230V L	E6/C-0	1	**494750**
600	685	KS2 600 S2 230V R	E6/C-0	1	**494960**
		KS2 600 S2 230V L	E6/C-0	1	**494760**
800	765	KS2 800 S2 230V R	E6/C-0	1	**494980**
		KS2 800 S2 230V L	E6/C-0	1	**494780**

aumüller

DATA SHEET KS2 S12 24V DC R

24V

- Application: natural ventilation, SHEV, ferralux®-NSHEV
- Internal Intelligent Control Electronics S12
- Z-Version: Programmable feedback limit position „OPEN“ and „CLOSE“ (max. 24V, 500 mA)

OPTIONS

- Programmable special functions
- M-COM for automatic synchronised run of multi drive systems and automatic sequence control with locking drives (S3 / S12)

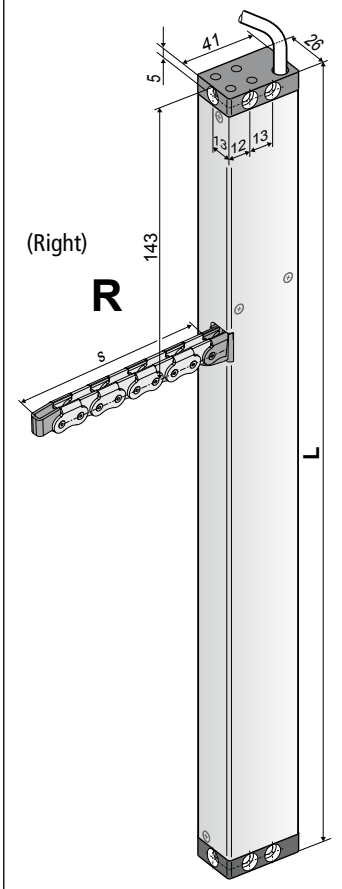

TECHNICAL DATA

U_N	Rated voltage	24V DC (19 V ... 28 V)
I_N	Rated current	0,7 A
I_A	Cut-off current	1,0 A
P_N	Rated power	17 W
DC	Duty cycle	5 cycles (ED 30 % - ON: 3 min. / OFF: 7 min.)
	Protection rating	IP 32
	Ambient temperature range	-5 °C ... +60 °C
F_Z	Pulling force max.	250 N
F_A	Pushing force	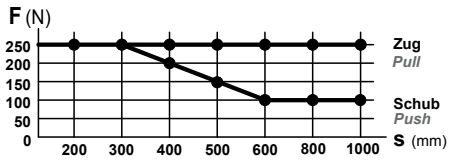 s > 600 mm only for pulling application
F_H	Pullout force	1.800 N (fastening depended)
	Chain	Stainless steel, without protruding rivet heads. Simple connection to casement brackets. Small bending radii allow maximum opening angles of small windows.
	Connecting cable	non-halogen, grey 3 x 0,5 mm², ~ 3 m non-halogen, grey 5 x 0,5 mm², ~ 3 m (Z version)
v	Speed	s < 400 8,0 mm/s 8,0 mm/s s 500 – 600 12,0 mm/s 8,0 mm/s s > 600 13,5 mm/s 8,0 mm/s
s	Stroke	50 – 1000 mm
L	Length	see order data
	Sound pressure level A	≤ 70 dB (A)

Order Data

s [mm]	L [mm]	Version	Finish	PU/pcs.	Part.-No.
200	335	KS2 200 S12 24V R (rechts)	E6/C-0	1	**521620**
		KS2 200 S12 24V R Z	E6/C-0	1	**521623**
300	380	KS2 300 S12 24V R	E6/C-0	1	**521630**
		KS2 300 S12 24V R Z	E6/C-0	1	**521633**
400	430	KS2 400 S12 24V R	E6/C-0	1	**521640**
		KS2 400 S12 24V R Z	E6/C-0	1	**521643**
500	545	KS2 500 S12 24V R	E6/C-0	1	**521650**
		KS2 500 S12 24V R Z	E6/C-0	1	**521653**
600	545	KS2 600 S12 24V R	E6/C-0	1	**521660**
		KS2 600 S12 24V R Z	E6/C-0	1	**521663**
800	625	KS2 800 S12 24V R	E6/C-0	1	**521680**
		KS2 800 S12 24V R Z	E6/C-0	1	**521683**

OPTIONS

Special model	PU/pcs.	Part.-No.
Drive housing painted/powder coated in other RAL colours		
Lump sum for coating		**516030**
Specify at order stage:	1 – 20	**516004**
	21 – 50	**516004**
	51 – 100	**516004**
	from 101	**516004**
Extra length connecting cable:		
5 m – non-halogen, grey – 3 x 0,5 mm²		**501034**
10 m – non-halogen, grey – 3 x 0,5 mm²		**501036**
5 m – non-halogen, grey – 5 x 0,5 mm²		**501054**
10 m – non-halogen, grey – 5 x 0,5 mm²		**501056**
Microprocessor programming S12		
Electronic stroke reduction 24V S12		**524190**
Programming drives 24V / 230V S12		**524180**
Optional accessories	PU/pcs.	**Part.-No.**
M-COM Configuration module for synchronised multi-drive systems	1	**524177**

EXPLANATIONS ON THE PRODUCT LABEL

The product label informs about:

- manufacturer's address
- article reference number and name
- technical caracteristics
- date of manufacturing with firmware version
- certifications
- serial number

NOTE Never install and operate damaged products.

In the event of any complaints, please indicate the product serial number (SN) (see product label).

Exemplary representation

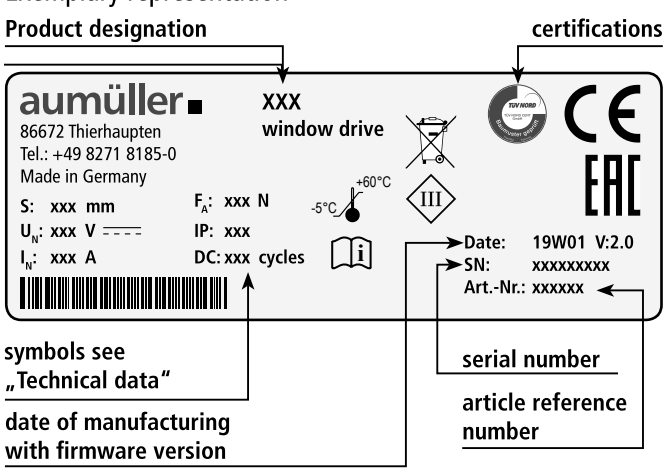

aumüller

DATA SHEET KS2 S12 24V DC L

24V

- Application: natural ventilation, SHEV, ferralux®-NSHEV
- Internal Intelligent Control Electronics S12
- Z-Version: Programmable feedback limit position „OPEN“ and „CLOSE“ (max. 24V, 500 mA)

OPTIONS

- Programmable special functions
- M-COM for automatic synchronised run of multi drive systems and automatic sequence control with locking drives (S3 / S12)

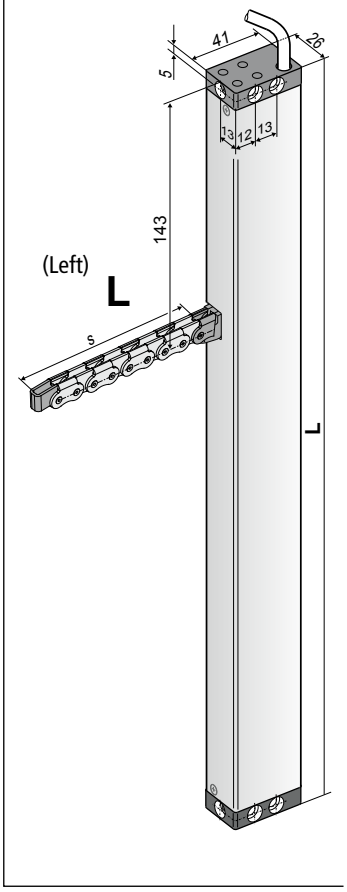

TECHNICAL DATA

U_N	Rated voltage	24V DC (19 V ... 28 V)
I_N	Rated current	0,7 A
I_A	Cut-off current	1,0 A
P_N	Rated power	17 W
DC	Duty cycle	5 cycles (ED 30 % - ON: 3 min. / OFF: 7 min.)
	Protection rating	IP 32
	Ambient temperature range	-5 °C ... +60 °C
F_Z	Pulling force max.	250 N
F_A	Pushing force	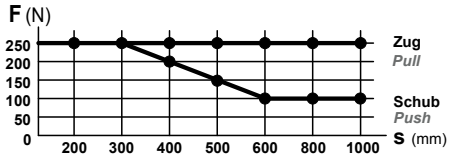 s > 600 mm only for pulling application
F_H	Pullout force	1.800 N (fastening depended)
	Chain	Stainless steel, without protruding rivet heads. Simple connection to casement brackets. Small bending radii allow maximum opening angles of small windows.
	Connecting cable	non-halogen, grey 3 x 0,5 mm², ~ 3 m non-halogen, grey 5 x 0,5 mm², ~ 3 m (Z version)
v	Speed	s < 400 8,0 mm/s 8,0 mm/s s 500 – 600 12,0 mm/s 8,0 mm/s s > 600 13,5 mm/s 8,0 mm/s
s	Stroke	50 – 1000 mm
L	Length	see order data
	Sound pressure level A	≤ 70 dB (A)

24V

ORDER DATA

s [mm]	L [mm]	Version	Finish	PU/pcs.	Part.-No.
200	335	KS2 200 S12 24V L (links)	E6/C-0	1	**521720**
		KS2 200 S12 24V L Z	E6/C-0	1	**521723**
300	380	KS2 300 S12 24V L	E6/C-0	1	**521730**
		KS2 300 S12 24V L Z	E6/C-0	1	**521733**
400	430	KS2 400 S12 24V L	E6/C-0	1	**521740**
		KS2 400 S12 24V L Z	E6/C-0	1	**521743**
500	545	KS2 500 S12 24V L	E6/C-0	1	**521750**
		KS2 500 S12 24V L Z	E6/C-0	1	**521753**
600	545	KS2 600 S12 24V L	E6/C-0	1	**521760**
		KS2 600 S12 24V L Z	E6/C-0	1	**521763**
800	625	KS2 800 S12 24V L	E6/C-0	1	**521780**
		KS2 800 S12 24V L Z	E6/C-0	1	**521783**

OPTIONS

Special model	PU/pcs.	Part.-No.
Drive housing painted/powder coated in other RAL colours		
Lump sum for coating		**516030**
Specify at order stage:	1 – 20	**516004**
	21 – 50	**516004**
	51 – 100	**516004**
	from 101	**516004**
Extra length connecting cable:		
5 m – non-halogen, grey – 3 x 0,5 mm²		**501034**
10 m – non-halogen, grey – 3 x 0,5 mm²		**501036**
5 m – non-halogen, grey – 5 x 0,5 mm²		**501054**
10 m – non-halogen, grey – 5 x 0,5 mm²		**501056**
Microprocessor programming S12		
Electronic stroke reduction 24V S12		**524190**
Programming drives 24V / 230V S12		**524180**
Optional accessories	PU/pcs.	**Part.-No.**
M-COM Configuration module for synchronised multi-drive systems	1	**524177**

aumüller

DATA SHEET KS2 S12 230V AC R

230V

- Application: natural ventilation
- Internal Intelligent Control Electronics S12
- Parallel connection up to 8 drives in one group
- Z-Version: Programmable feedback limit position „OPEN" and „CLOSE" (max. 24V, 500 mA)

OPTIONS

- Programmable synchronised run (max. 4 drives) and special functions (Attention: not possible with Z-version)

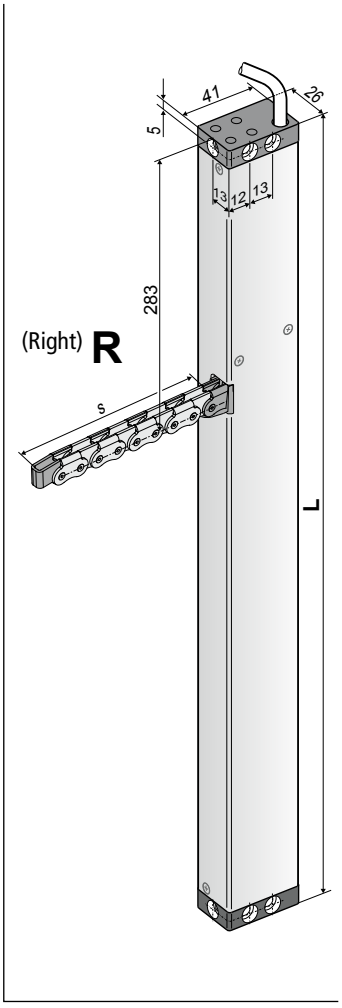

TECHNICAL DATA

U_N	Rated voltage	230V AC (50 Hz)
I_N	Rated current	0,13 A
I_A	Cut-off current	0,2 A
P_N	Rated power	30 W
DC	Duty cycle	30 % (ON: 3 min/OFF: 7 min.)
	Protection rating	IP 32
	Ambient temperature range	-5 °C ... +60 °C
F_Z	Pulling force max.	250 N
F_A	Pushing force	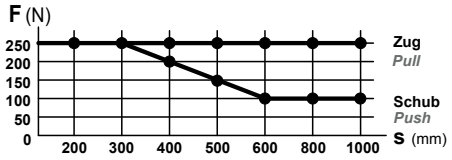 s > 600 mm only for pulling application
F_H	Pullout force	1.800 N (fastening depended)
	Chain	Stainless steel, without protruding rivet heads. Simple connection to casement brackets. Small bending radii allow maximum opening angles of small windows.
	Connecting cable	non-halogen, grey 6 x 0,75 mm², ~ 3 m
v	Speed	8,0 mm/s 8,0 mm/s
s	Stroke	50 – 1000 mm
L	Length	see order data
	Sound pressure level A	≤ 70 dB (A)

230V

ORDER DATA								
s [mm]	L [mm]	Version	Finish	PU/pcs.	**Part.-No.**			
200	475	KS2 200 S12 230V R (rechts)	E6/C-0	1	**494020**			
		KS2 200 S12 230V R Z	E6/C-0	1	**494023**			
300	520	KS2 300 S12 230V R	E6/C-0	1	**494030**			
		KS2 300 S12 230V R Z	E6/C-0	1	**494033**			
400	570	KS2 400 S12 230V R	E6/C-0	1	**494040**			
		KS2 400 S12 230V R Z	E6/C-0	1	**494043**			
500	685	KS2 500 S12 230V R	E6/C-0	1	**494050**			
		KS2 500 S12 230V R Z	E6/C-0	1	**494053**			
600	685	KS2 600 S12 230V R	E6/C-0	1	**494060**			
		KS2 600 S12 230V R Z	E6/C-0	1	**494063**			
800	765	KS2 800 S12 230V R	E6/C-0	1	**494080**			
		KS2 800 S12 230V R Z	E6/C-0	1	**494083**			

OPTIONEN					
Special model	PU/pcs.	**Part.-No.**			
Drive housing painted/powder coated in other RAL colours					
Lump sum for coating		**516030**			
Specify at order stage:	1 – 20	**516004**			
	21 – 50	**516004**			
	51 – 100	**516004**			
	from 101	**516004**			
Extra length connecting cable:					
5 m – non-halogen, grey – 6 x 0,75 mm²		**501164**			
10 m – non-halogen, grey – 6 x 0,75 mm²		**501166**			
Microprocessor programming S12					
Programming synchronised multi-drive systems 230V S12		**495588**			
Electronic stroke reduction 230V S12		**495590**			
Programming drives 24V / 230V S12		**524180**			

EXPLANATIONS ON THE VERSION „Z" (FOR EXAMPLE KS2 TWIN 600 S12 24V Z)

Drives with **version „Z"** (e.g. KS2 TWIN 600 S2 24V **Z**) have an additional volt free contact with connection for an external signal monitoring.
The volt free contact (max. 24V, 500mA) is open when the drive is in **CLOSED** position.

aumüller

DATA SHEET KS2 S12 230V AC L

230V

- Application: natural ventilation
- Internal Intelligent Control Electronics S12
- Parallel connection up to 8 drives in one group
- Z-Version: Programmable feedback limit position „OPEN" and „CLOSE" (max. 24V, 500 mA)

OPTIONS

- Programmable synchronised run (max. 4 drives) and special functions (Attention: not possible with Z-version)

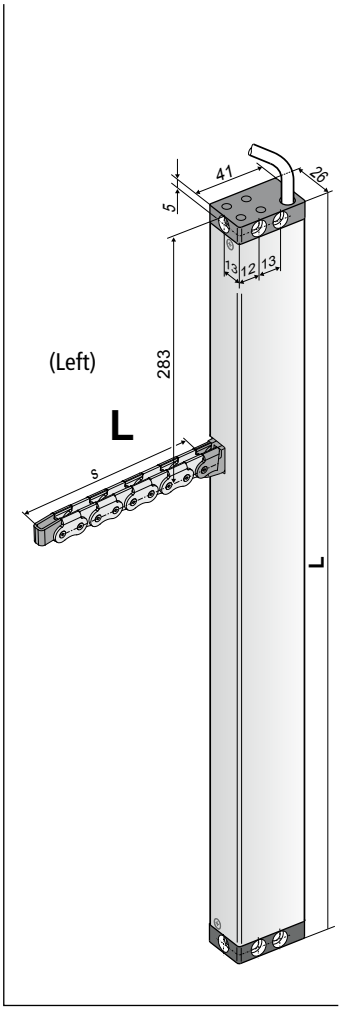

TECHNICAL DATA

U_N	Rated voltage	230V AC (50 Hz)
I_N	Rated current	0,13 A
I_A	Cut-off current	0,2 A
P_N	Rated power	30 W
DC	Duty cycle	30 % (ON: 3 min/OFF: 7 min.)
	Protection rating	IP 32
	Ambient temperature range	-5 °C ... +60 °C
F_Z	Pulling force max.	250 N
F_A	Pushing force	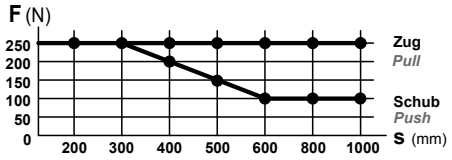 s > 600 mm only for pulling application
F_H	Pullout force	1.800 N (fastening depended)
	Chain	Stainless steel, without protruding rivet heads. Simple connection to casement brackets. Small bending radii allow maximum opening angles of small windows.
	Connecting cable	non-halogen, grey 6 x 0,75 mm², ~ 3 m
v	Speed	8,0 mm/s 8,0 mm/s
s	Stroke	50 – 1000 mm
L	Length	see order data
	Sound pressure level A	≤ 70 dB (A)

230V

ORDER DATA

s [mm]	L [mm]	Version	Finish	PU/pcs.	Part.-No.
200	475	KS2 200 S12 230V L (links)	E6/C-0	1	**494120**
		KS2 200 S12 230V L Z	E6/C-0	1	**494123**
300	520	KS2 300 S12 230V L	E6/C-0	1	**494130**
		KS2 300 S12 230V L Z	E6/C-0	1	**494133**
400	570	KS2 400 S12 230V L	E6/C-0	1	**494140**
		KS2 400 S12 230V L Z	E6/C-0	1	**494143**
500	685	KS2 500 S12 230V L	E6/C-0	1	**494150**
		KS2 500 S12 230V L Z	E6/C-0	1	**494153**
600	685	KS2 600 S12 230V L	E6/C-0	1	**494160**
		KS2 600 S12 230V L Z	E6/C-0	1	**494163**
800	765	KS2 800 S12 230V L	E6/C-0	1	**494180**
		KS2 800 S12 230V L Z	E6/C-0	1	**494183**

OPTIONEN

Special model	PU/pcs.	Part.-No.
Drive housing painted/powder coated in other RAL colours		
Lump sum for coating		**516030**
Specify at order stage:	1 – 20	**516004**
	21 – 50	**516004**
	51 – 100	**516004**
	from 101	**516004**
Extra length connecting cable:		
5 m – non-halogen, grey – 6 x 0,75 mm²		**501164**
10 m – non-halogen, grey – 6 x 0,75 mm²		**501166**
Microprocessor programming S12		
Programming synchronised multi-drive systems 230V S12		**495588**
Electronic stroke reduction 230V S12		**495590**
Programming drives 24V / 230V S12		**524180**

DATA SHEET KS2 TWIN S12 24V DC

- Application: natural ventilation, RWA
- Internal Intelligent Control Electronics S12
- Z-Version: Programmable feedback limit position „OPEN“ and „CLOSE“ (max. 24V, 500 mA)

OPTIONS

- Programmable special functions
- M-COM for automatic synchronised run of multi drive systems and automatic sequence control with locking drives (S3 / S12)

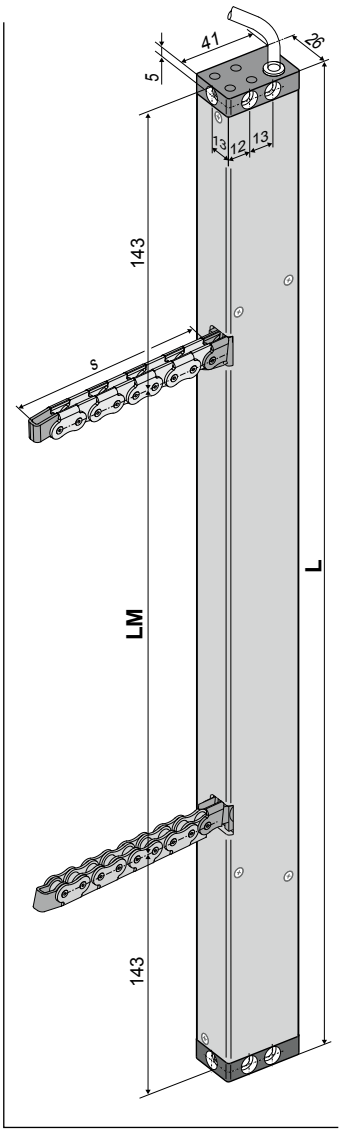

TECHNICAL DATA

U_N	Rated voltage	24V DC (19 V ... 28 V)
I_N	Rated current	1,4 A
I_A	Cut-off current	2,0 A
P_N	Rated power	34 W
DC	Duty cycle	30 % (ON: 3 min/OFF: 7 min.)
	Protection rating	IP 32
	Ambient temperature range	-5 °C ... +60 °C
F_Z	Pulling force max.	500 N
F_A	Pushing force	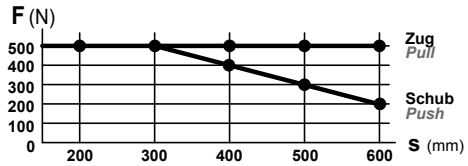
F_H	Pullout force	1.800 N (fastening depended)
	Chain	Stainless steel, without protruding rivet heads. Simple connection to casement brackets. Small bending radii allow maximum opening angles of small windows.
	Connecting cable	non-halogen, grey 3 x 0,5 mm², ~ 3 m non-halogen, grey 5 x 0,5 mm², ~ 3 m (Z version)
v	Speed	s < 400 8,0 mm/s 8,0 mm/s s 500 – 600 12,0 mm/s 8,0 mm/s
s	Stroke	50 – 600 mm
L	Length	see order data
LM	Distance in between chains	see order data
	Sound pressure level A	≤ 70 dB (A)

Order Data

s [mm]	L [mm]	LM [mm]	Version	Finish	PU/pcs.	Part.-No.
200	640	354	KS2 TWIN 200 S12 24V	E6/C-0	1	**521820**
			KS2 TWIN 200 S12 24V Z	E6/C-0	1	**521823**
400	830	544	KS2 TWIN 400 S12 24V	E6/C-0	1	**521840**
			KS2 TWIN 400 S12 24V Z	E6/C-0	1	**521843**
500	1060	774	KS2 TWIN 500 S12 24V	E6/C-0	1	**521850**
			KS2 TWIN 500 S12 24V Z	E6/C-0	1	**521853**
600	1060	774	KS2 TWIN 600 S12 24V	E6/C-0	1	**521860**
			KS2 TWIN 600 S12 24V Z	E6/C-0	1	**521863**

DATA SHEET KS2 S12 230V AC TANDEM-SET

230V

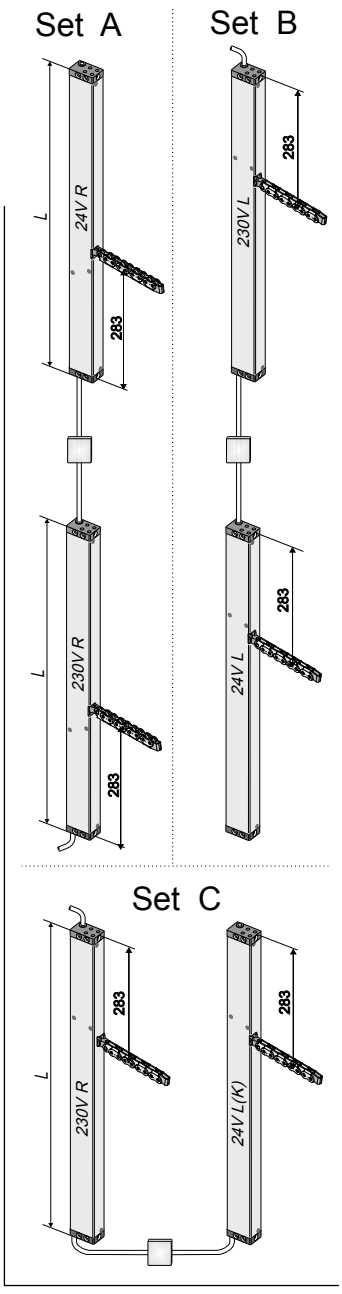

- Application: natural ventilation
- Factory-configured set includes:
  Master: KS2 S12 230V AC R/L with voltage output 24V DC
  Slave: KS2 S12 24V DC R/L with conection cable on the motor side
  KS2 S12 24V DC L-K with conection cable on the chain side
- Sequence control with locking drives (S3 / S12)
- Parallel connection up to 8 sets of drives in one group
- Junction box to be site supplied

OPTIONS:

- Programmable special functions and sequence control with locking drives (S3 / S12)
- Screw terminal connections in drive housing upon request

TECHNICAL DATA

U_N	Rated voltage	230V AC (50 Hz)
I_N	Rated current	0,15 A
I_A	Cut-off current	0,2 A
P_N	Rated power	35 W
DC	Duty cycle	5 cycles (ED 30 % - ON: 3 min. / OFF: 7 min.)
	Protection rating	IP 32
	Ambient temperature range	-5 °C ... +60 °C
F_Z	Pulling force max.	2 x 250 N
F_A	Pushing force	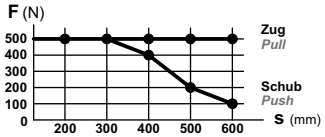 s > 600 mm only for pulling application
F_H	Pullout force	1.800 N (fastening depended)
	Chain	Stainless steel, without protruding rivet heads. Simple connection to casement brackets. Small bending radii allow maximum opening angles of small windows.
	Connecting cable	Master: non-halogen, grey 6 x 0,75 mm², ~ 3 m 3 x 0,5 mm², ~ 3 m Slave: non-halogen, grey 3 x 0,5 mm², ~ 3 m
v	Speed	8,0 mm/s 8,0 mm/s
s	Stroke	50 – 1000 mm
L	Length	see order data
	Sound pressure level A	≤ 70 dB (A)

ORDER DATA

s [mm]	L [mm]	Version	Finish	PU/pcs.	Part.-No.
200	475	KS2 200 S12 230V Set A (R/R)	E6/C-0	1	**494220**
		KS2 200 S12 230V Set B (L/L)	E6/C-0	1	**494320**
		KS2 200 S12 230V Set C (R/L-K)	E6/C-0	1	**494420**
300	520	KS2 300 S12 230V Set A (R/R)	E6/C-0	1	**494230**
		KS2 300 S12 230V Set B (L/L)	E6/C-0	1	**494330**
		KS2 300 S12 S 230V et C (R/L-K)	E6/C-0	1	**494430**
400	570	KS2 400 S12 230V Set A (R/R)	E6/C-0	1	**494240**
		KS2 400 S12 230V Set B (L/L)	E6/C-0	1	**494340**
		KS2 400 S12 230V Set C (R/L-K)	E6/C-0	1	**494440**
500	685	KS2 500 S12 230V Set A (R/R)	E6/C-0	1	**494250**
		KS2 500 S12 230V Set B (L/L)	E6/C-0	1	**494350**
		KS2 500 S12 230V Set C (R/L-K)	E6/C-0	1	**494450**
600	685	KS2 600 S12 230V Set A (R/R)	E6/C-0	1	**494260**
		KS2 600 S12 230V Set B (L/L)	E6/C-0	1	**494360**
		KS2 600 S12 230V Set C (R/L-K)	E6/C-0	1	**494460**
800	765	KS2 800 S12 230V Set A (R/R)	E6/C-0	1	**494280**
		KS2 800 S12 230V Set B (L/L)	E6/C-0	1	**494380**
		KS2 800 S12 230V Set C (R/L-K)	E6/C-0	1	**494480**

OPTIONS

Special model	PU/pcs.	Part.-No.
Drive housing painted/powder coated in other RAL colours		
Specify at order stage:		**516004**
Extra length connecting cable:		
5 m – non-halogen, grey – 6 x 0,75 mm²		**501164**
10 m – non-halogen, grey – 6 x 0,75 mm²		**501166**
5 m – non-halogen, grey – 3 x 0,5 mm²		**501034**
10 m – non-halogen, grey – 3 x 0,5 mm²		**501036**
Microprocessor programming S12		
Programming synchronised multi-drive systems 230V S12		**495588**

DRIVE POSITIONING: SYMMETRICAL OR ASYMMETRICAL

24V 230V

Drive positioning: Symmetrical

Symmetrical linkage of casement bracket or frame bracket should always be preferred to an asymmetrical one.

Advantage:

- for a Tandem-drive application, combination of drives in R / L version can be used
- uniform force transmission to the window
- uniform casement pressure (tightness)

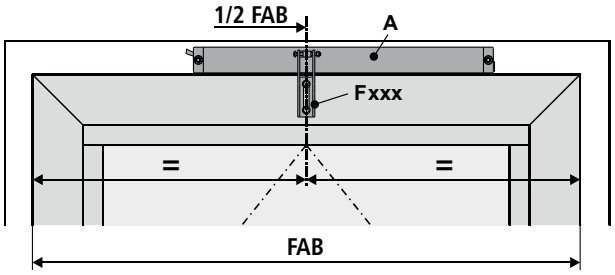

Drive positioning: Asymmetrical

Asymmetrical linkage of casement bracket or frame bracket can be used in case of lack of space on the window frame / casement.

Check:

- unequal force transmission to the window
- window statics allows unequal force distribution
- unequal casement pressure (tightness)

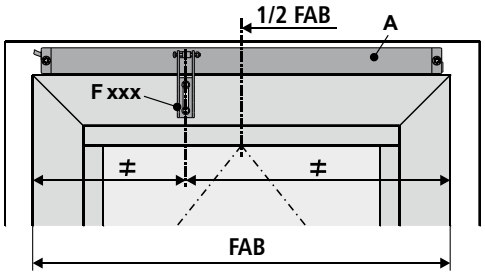

Survey: Growing variants and minimum casement heights

24V 230V

Growing variants: Bottom-hung windows with tensile load

Casement assembly Drive ride-on inward opening

Frame bracket: **K94**
Casement bracket: **F21**
Drive fixed
Space on the frame min. **16** mm

Stroke	FAH min.
200	325
300	500
400	750
500	975
600	1200
800	1600

See chapter **Installation step: 5A**

Frame bracket: **K94**
Casement bracket: **F21**
Drive fixed
Space on the frame min. **21** mm

Stroke	FAH min.
200	325
300	450
400	550
500	675
600	800
800	1080

See chapter **Installation step: 5A**

Frame bracket: **K129**
Casement bracket: **F21**
Drive fixed
Space on the frame min. **25** mm

Stroke	FAH min.
200	325
300	450
400	550
500	675
600	800
800	1080

See chapter **Installation step: 5A**

Frame assembly Drive stationary inward opening

Frame bracket: **-**
Casement bracket: **F120**
Drive fixed
Space on the frame min. **28** mm

Stroke	FAH min.
200	425
300	500
400	600
500	775
600	950
800	1250

See chapter **Installation step: 5B**

Frame bracket: **-**
Casement bracket: **F95**
Drive fixed
Space on the frame min. **28** mm

Stroke	FAH min.
200	425
300	500
400	600
500	775
600	950
800	1250

See chapter **Installation step: 5B**

Frame bracket: **K96-1**
Casement bracket: **F95**
Drive swiveling
Space on the frame min. **30** mm

Stroke	FAH min.
200	250
300	325
400	400
500	500
600	600
800	800

See chapter **Installation step: 5C**

Frame assembly Drive stationary outward opening

Frame bracket: **K94**
Casement bracket: **F21**
Drive fixed
Space on the frame min. **22** mm

Stroke	FAH min.
200	325
300	450
400	550
500	675
600	800
800	1080

See chapter **Installation step: 5D**

Growing variants: Top-hung windows with pressure load

Frame assembly Drive stationary outward opening

Frame bracket: **K130**
Casement bracket: **F21**
Drive fixed
Space on the frame min. **22** mm

Stroke	FAH min.
200	350
300	400
400	450
500	600
600	
800	

See chapter **Installation step: 5E**

Frame assembly Drive stationary outward opening

Frame bracket: **K94**
Casement bracket: **F21**
Drive fixed
Space on the frame min. **22** mm

Stroke	FAH min.
200	350
300	400
400	450
500	600
600	
800	

See chapter **Installation step: 5F**

Frame bracket: **K94**
Casement bracket: **F21**
Drive fixed rotated
Space on the frame min. **22** mm

Stroke	FAH min.
200	400
300	500
400	700
500	800
600	
800	

See chapter **Installation step: 5G**

Frame bracket: **K128**
Casement bracket: **F21**
Drive fixed
AWS 57 RO Schüco

Stroke	FAH min.
200	450
300	500
400	550
500	700
600	
800	

See chapter **Installation step: 5H**

Frame assembly Drive stationary inward opening

Frame bracket: **-**
Casement bracket: **F120**
Drive fixed
Space on the frame min. **28** mm

Stroke	FAH min.
200	350
300	400
400	450
500	700
600	
800	

See chapter **Installation step: 5I**

Frame bracket: **-**
Casement bracket: **F95**
Drive fixed
Space on the frame min. **28** mm

Stroke	FAH min.
200	350
300	400
400	450
500	700
600	
800	

See chapter **Installation step: 5I**

Window assembly Drive ride-on inward opening

Frame bracket: **K94**
Casement bracket: **F21**
Drive fixed
Space on the frame min. **16** mm

Stroke	FAH min.
200	350
300	400
400	450
500	600
600	
800	

See chapter **Installation step: 5J**

Transom assem. Drive stationary outward opening

Frame bracket: **K93**
Casement bracket: **F21**
Drive fixed

Stroke	FAH min.
200	350
300	400
400	450
500	600
600	
800	

See chapter **Installation step: 5K**

Values are determined in:
Casement weight: max. 30 kg/m²
Casement width: max. 1200 mm (with 1 drive)
Window overlap: 10 mm

POSSIBLE MULTI-DRIVE OPERATING WITH M-COM

24V **230V**

Possible multi-drive operating of KS2 S12 in 24V DC with M-COM — 24V

Multi-drive operating — Version: Right

Configuration multi-drive operating with M-COM

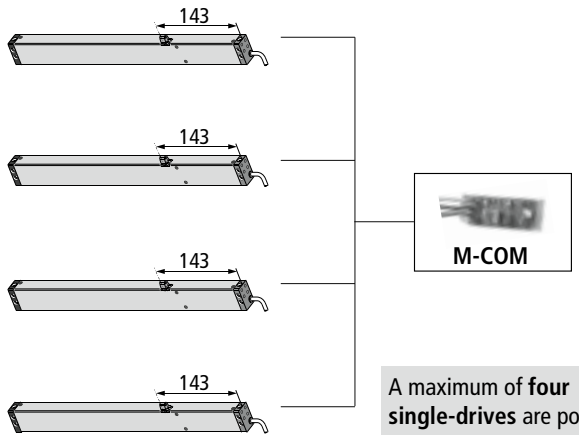

A maximum of **four single-drives** are possible.

Multi-drive operating — Version: left

Configuration multi-drive operating with M-COM

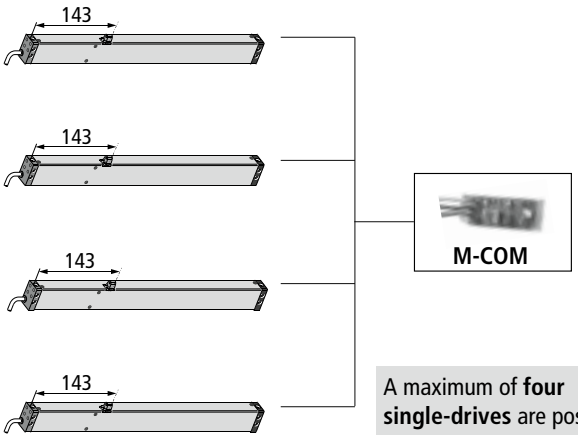

A maximum of **four single-drives** are possible.

Multi-drive operating — Combination: Right + Left

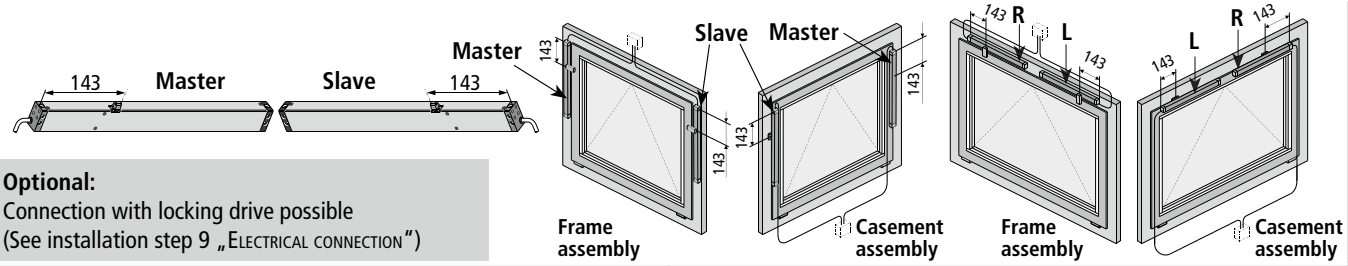

Optional:
Connection with locking drive possible
(See installation step 9 „ELECTRICAL CONNECTION")

Possible multi-drive operating of KS2 S12 in 230V AC — 230V

Multi-drive operating — Set A (Version: Right)

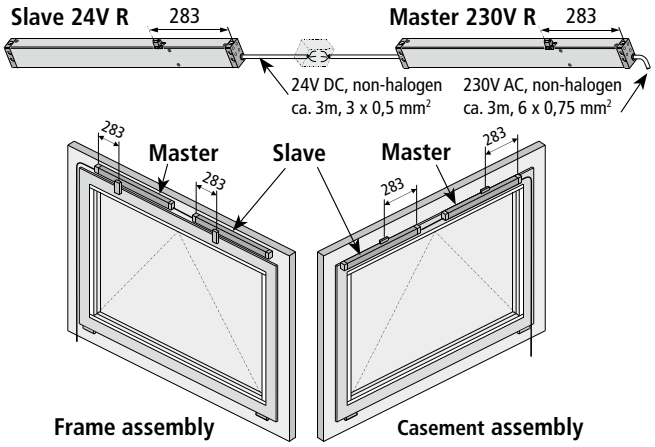

Multi-drive operating — Set B (Version: left)

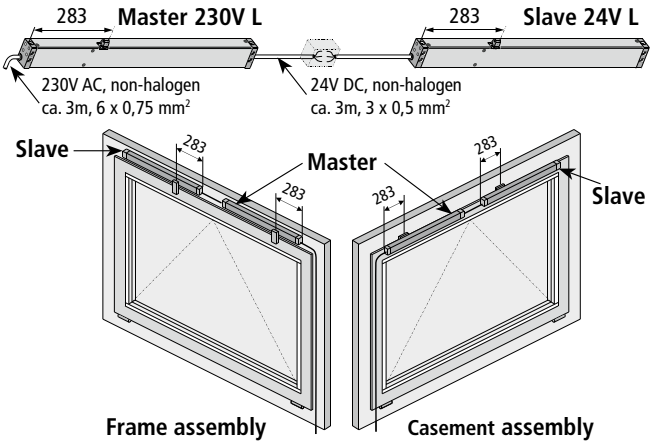

Multi-drive operating — Set C (Combination: Master R + Slave L (K))

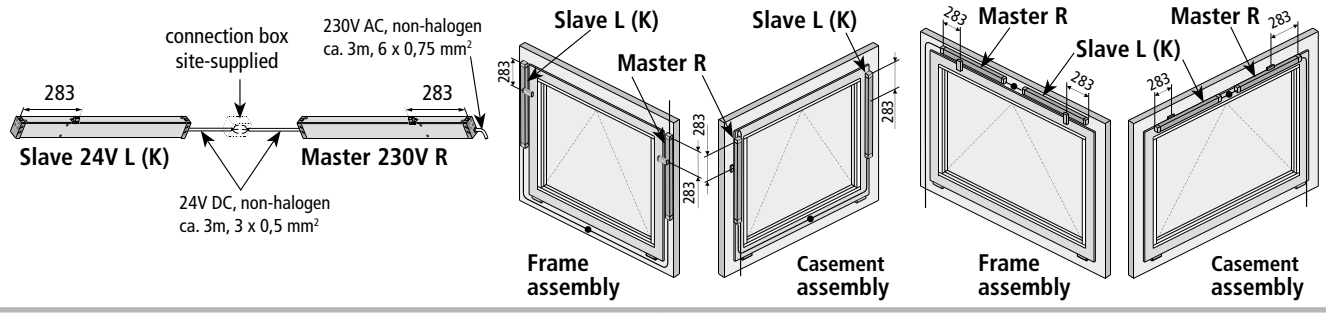

Installation step 1: Inspection before the installation

⚠ Warning Important instructions for a safe installation. Observe all instructions, wrong installation may result in serious injury!

Storage of drives at the construction site

Protective measures against damages, dust, moisture or contamination shall be taken. Store drives intermediately only in dry and well ventilated rooms.

Inspection of drives before installation

Check drives and window before installation for good mechanical condition and completeness. The chains / spindles of the drives must be extendable or retractable easily. The casement must run smoothly and the weight must be in balance.

Note We recommend the use of our test kit for the inspection of drives with the rated voltage 24V= / 230V~ (see table below). Damaged products may not be operated under any circumstance.

Test kit for drives	
Order number:	**533981**
Application:	Test kit to check running direction and communication of drives 24V DC or 230V AC (including batteries)
Supply voltage:	230V AC
Drive types:	24V DC / 230V AC
Drive current:	max. 3 A
Display:	drive current, battery charge
Ambient temperature:	-5 °C ... + 40 °C
Plastic housing:	250 x 220 x 210 mm
Weight:	approx. 3,6 kg
Feature / equipment:	Control elements: 2 switches + 1 button

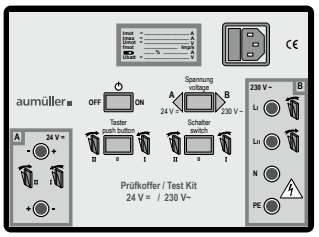

The test procedure of drives may only be performed on a non-slip and secured mat or a test fixture. During the test run the test element must not be interfered with. The test my only be conducted by or under the supervision of expert personnel.

For testing chain drives the chain must be extended and retracted at an angle of approx. 90°. The spindle tubes of spindle drives in round housing tubes must be secured against independent spinning before starting the test to avoid deviations in the position encoder.

Inspection of the intended use

The planned use of the drive must be checked for compliance with its intended use. If used otherwise the liability and warranty claim expires.

Predictable misuse

It is imperative that foreseeable misuse of drives is avoided! Here are a few examples:

- do not connect 24 V DC drives to a 230 V AC mains voltage,
- observe synchronous run and sequence control by drives with multiple interconnection,
- use drives only indoors,
- avoid additional force influences, e.g. transverse forces.

Testing mechanical requirements

Prior to the start of the installation check whether :

- the support surface and the profile static for the load transmission is sufficient,
- a support construction for the secure fastening of the drives is required,
- cold bridges (thermal separation) are avoidable at action points,
- there is sufficient space for the swivel movement of the drive.

If not, counter measures must be taken!

The support surface of the frame brackets or casement brackets must rest completely on the window or frame profile. There must be no tilting of the fastening elements during extension and retraction of the drives. A safe and solid fastening must be ensured at the window profile.

⚠ Caution It is imperative that the sufficiently mechanical stiffness of the fastener type as well as of the swivel range of the drive is observed.
If this is not guaranteed another type of fastening or another type of drive must be selected.

INSTALLATION STEP 2: INSTALLATION PREREQUISITE AND INSTALLATION PREPARATION

The following conditions must be fulfilled for the installation of the drives so they can be properly assembled with other parts and constructed to a complete machine at the window without impairing the safety and health of persons:

1. The design of the drive must fulfill the requirements.
2. The fastening accessories (casement brackets or frame brackets) must fit the window profile; the profile-dependent hole lay-out must be complied with.
3. The space required for the installation of the drive on the frame and casement profile must be sufficient.
4. The window must be in perfect mechanical condition before the installation. It should open and close easily.
5. The fastening material for the installation of the drive must fit the window material (see table).

Wood windows	Wood screws: i.e. DIN 96, DIN 7996, DIN 571 round head with slot, round head with cross, hex head,special type	
steel, stainless steel, aluminum windows	Self-tapping screws, thread screws, sheet-metal screws i.e. ISO 4762, ISO 4017, ISO 7049 , ISO 7085, DIN 7500 cylinder head with hex socket, internal serration (Torx), Phillips head or external hex head blind rivet nut	
plastic windows	Screws for plastic i.e. DIN 95606, DIN 95607, ISO 7049, ISO 7085, DIN 7500 round head with cross, external hex head, Torx	Recommendation: if possible, screw through two cavity webs

Tools required

- Marker,
- Grains,
- Hammer,
- Screwdriver (slotted-head, cross or Torx) size by site conditions,
- Hexagonal wrench size 3 / 4 / 5 / 6,
- Torque wrench,
- Power drill,
- Threadlock adhesive,
- possibly a tool for blind rivet nuts (size 6).

Check window data on site

- Measure FAB and FAH.
- Check / calculate weight of casement.
  If unknown, it can be determined approximately with the following formula:

G (Casement weight) [kg] = **FAB** [m] * **FAH** [m] * **Glass thickness** [mm] * **2,5** glass-density * **1,1** frame share

- Check / calculate the required drive force and compare with drive data . If unknown, it can be determined approximately with the following formula:

F [N] = **Facade** $\frac{\mathbf{5,4} * \mathbf{G}\ [kg] * \mathbf{s}\ [m]}{\mathbf{a}\ [m]}$

F [N] = **Roof** $\frac{\mathbf{5,4} * \mathbf{G}\ [kg] * \mathbf{FAH}\ [m]}{\mathbf{a}\ [m]}$

a = Distance of action point to hinges
F = Drive force
s = Stroke

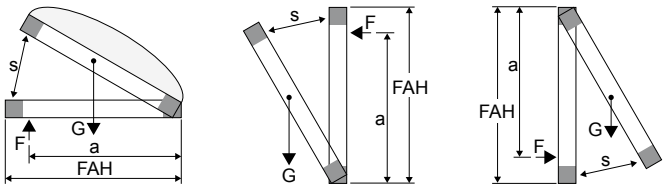

Scope of delivery:

Prior to assembly, check items quantity in the delivery for completeness.

Accessories for chain drive	
	Assembly and Commissioning Instructions
	Warning sign sticker „Risk of entrapment" (1x)

aumüller

INSTALLATION STEP 3: DETERMINE THE CASEMENT BRACKETS

24V **230V**

Hole layout for casement brackets

Casement bracket F17

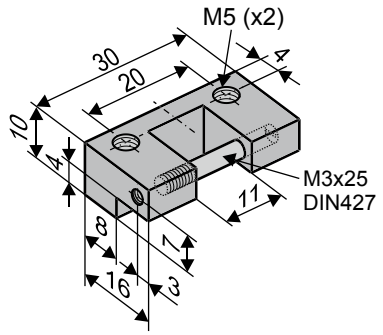

use with K105

Casement bracket F18

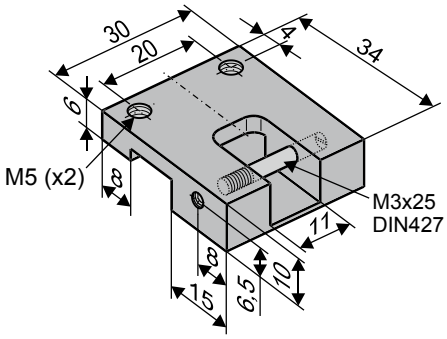

use with K105

Casement bracket F18-1

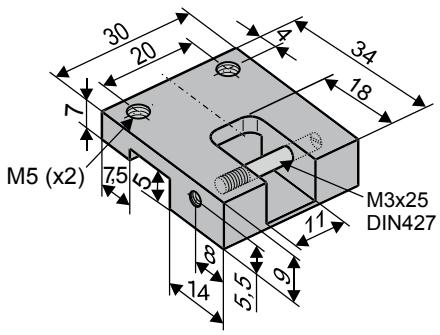

use with K105

Casement bracket F19

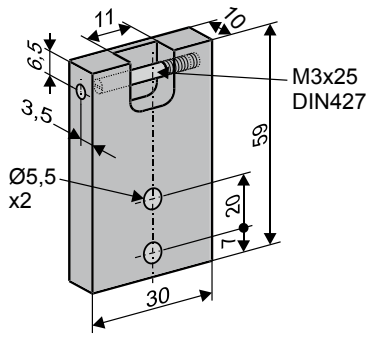

use with K105

Casement bracket F20

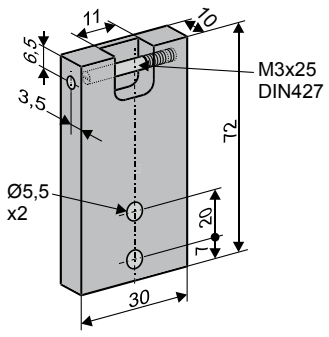

use with K105

Casement bracket F21

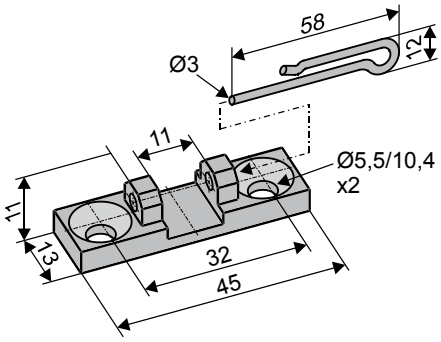

use with K93, K94, K129, K130 (B1, K128)

Casement bracket F35

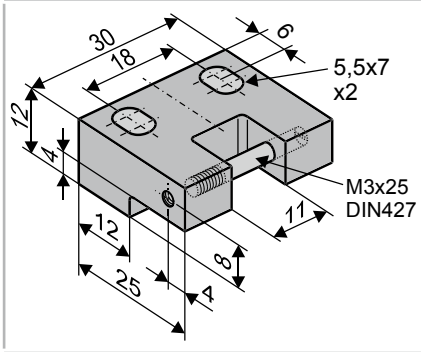

use with K93, K94, K129, K130

Casement bracket F37

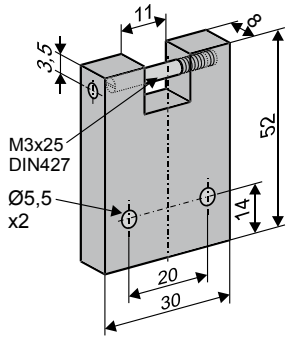

use with K93, K94, K129, K130

Casement bracket F95

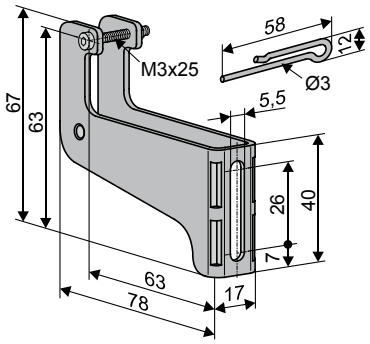

use with K96

Casement bracket F120

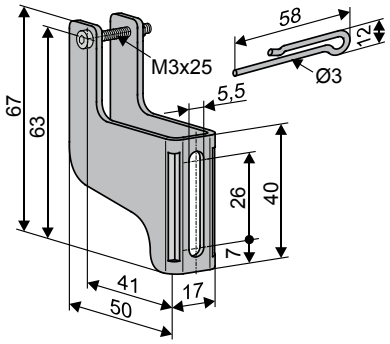

INSTALLATION STEP 4: DETERMINE THE FRAME BRACKETS

24V **230V**

Hole layout for frame brackets

Frame bracket K105-B

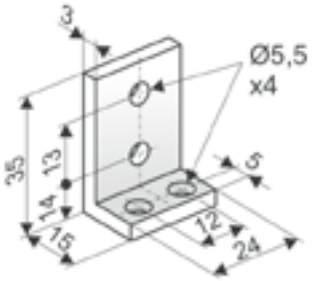

use with F17, F18, F19, F20

Frame bracket K105-A

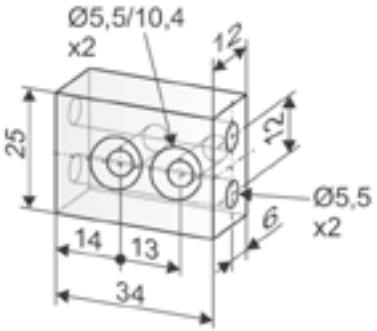

use with F17 (FAH min. 700 mm)

Frame bracket K106

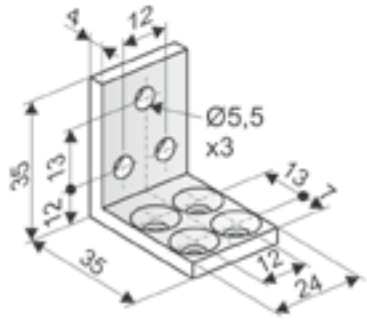

use with F19 FAH min.700mm F20 FAH min.500mm

Frame bracket K93

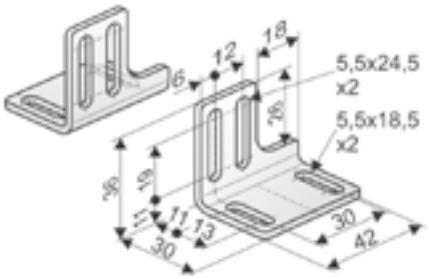

use with F21

Frame bracket K94

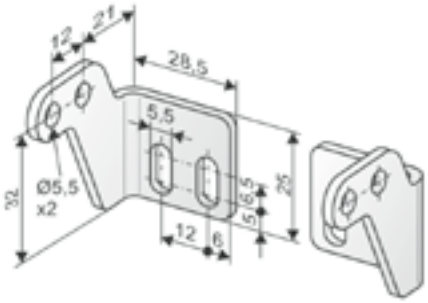

use with F21, F35, F37

Frame bracket K96-1

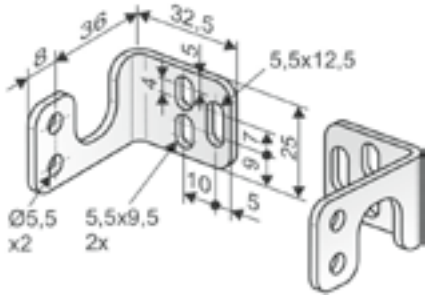

use with F95

Frame bracket K129

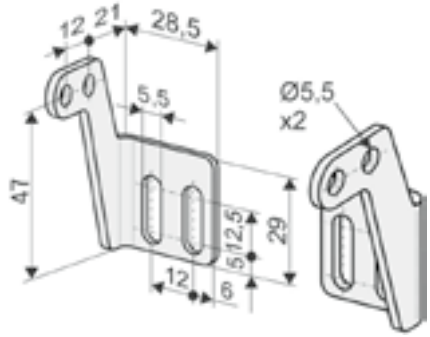

use with F21, F35, F37

Frame bracket K128

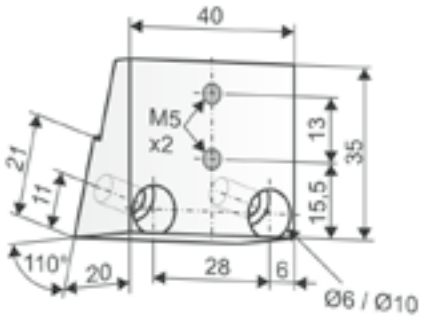

roof window Schüco AWS 57RO

Frame bracket K130

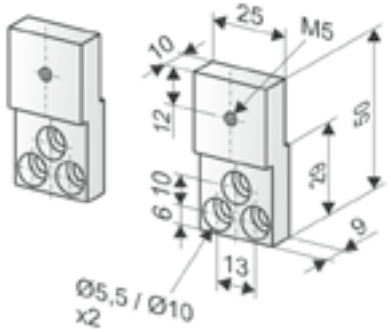

friction hinged window Schüco AWS102 SK

Frame bracket B1

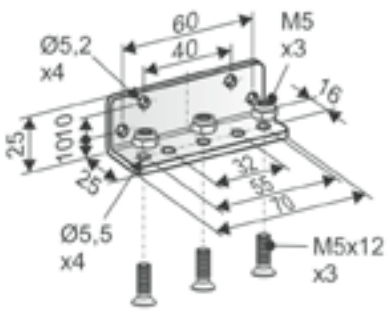

in skylight dome use with F21 and K125

Frame bracket K125

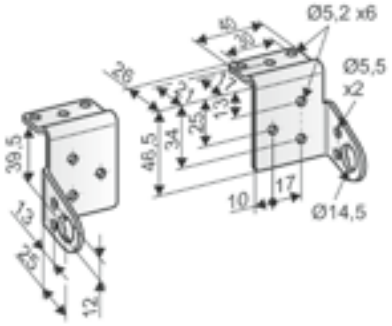

on skylight dome use with B1 and F21

aumüller

Application examples

24V 230V

Application examples on windows

Bottom-hung inward opening Casement assembly

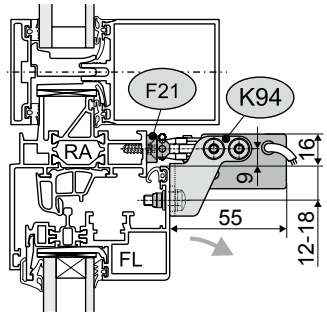

Detail of mounting on aluminium window

Bottom-hung inward opening Casement assembly

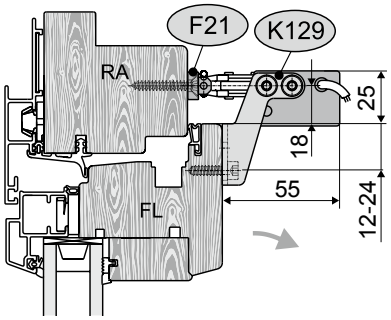

Detail of mounting on alu-wooden window

Top-hung outward opening Frame assembly

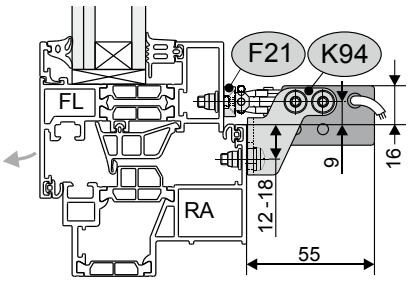

Detail of mounting on aluminium window

Top-hung outward opening Frame assembly

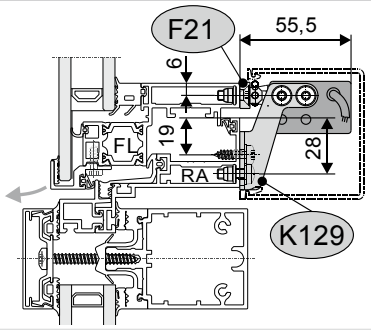

Detail of mounting on aluminium window

Bottom-hung inward opening Frame assembly

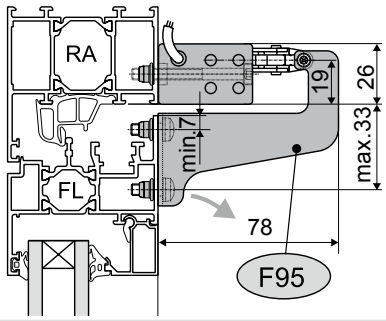

Detail of mounting on aluminium window

Bottom-hung inward opening Frame assembly

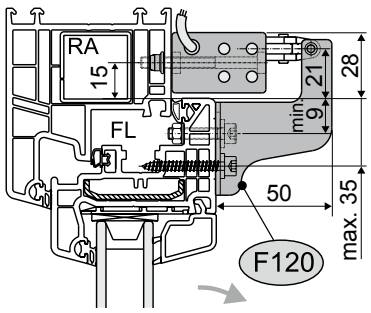

Detail of mounting on PVC window

Bottom-hung inward opening Frame assembly

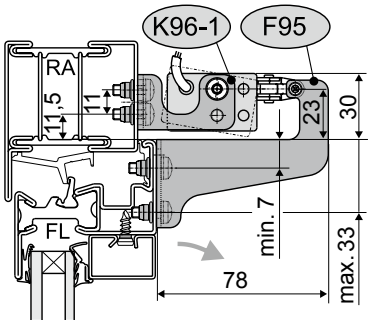

Detail of mounting on steel window

Top-hung outward opening Frame assembly

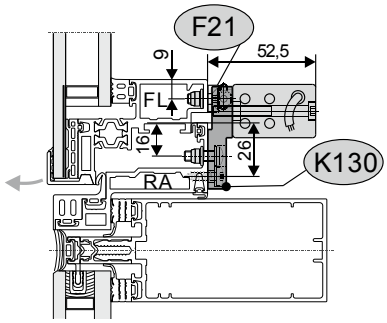

Detail of mounting on aluminium window

Top-hung outward opening Frame assembly

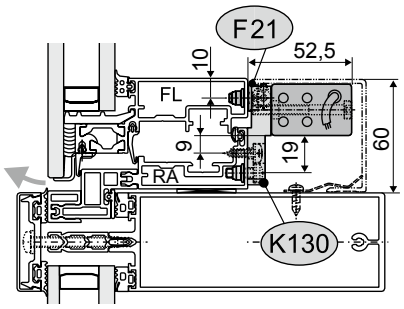

Detail of mounting on aluminium window

Top-hung outward opening Transom assembly

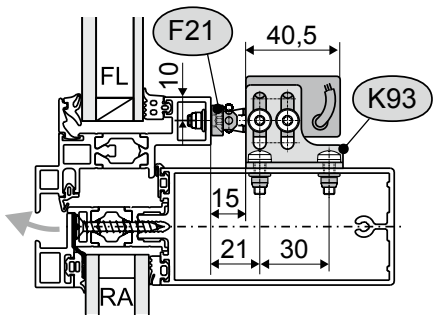

Detail of mounting on aluminium window

Bottom-hung inward opening Concealed assembly

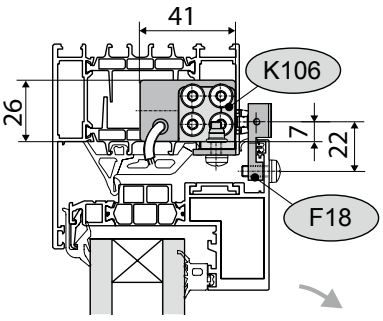

Detail of mounting on aluminium window

Top-hung outward opening Frame assembly

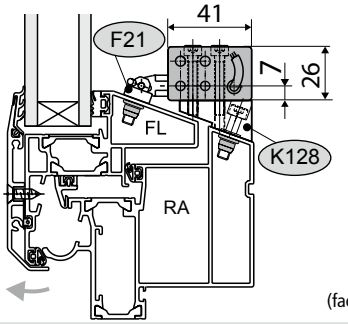

Detail of mounting on aluminium window

05

INSTALLATION STEP 5A: HOLE LAYOUT FOR THE FRAME BRACKETS K94 / K129 AND CASEMENT BRACKET F21

24V Solo application KS2 xxx / Version: right (Bottom-hung - inward opening windows)

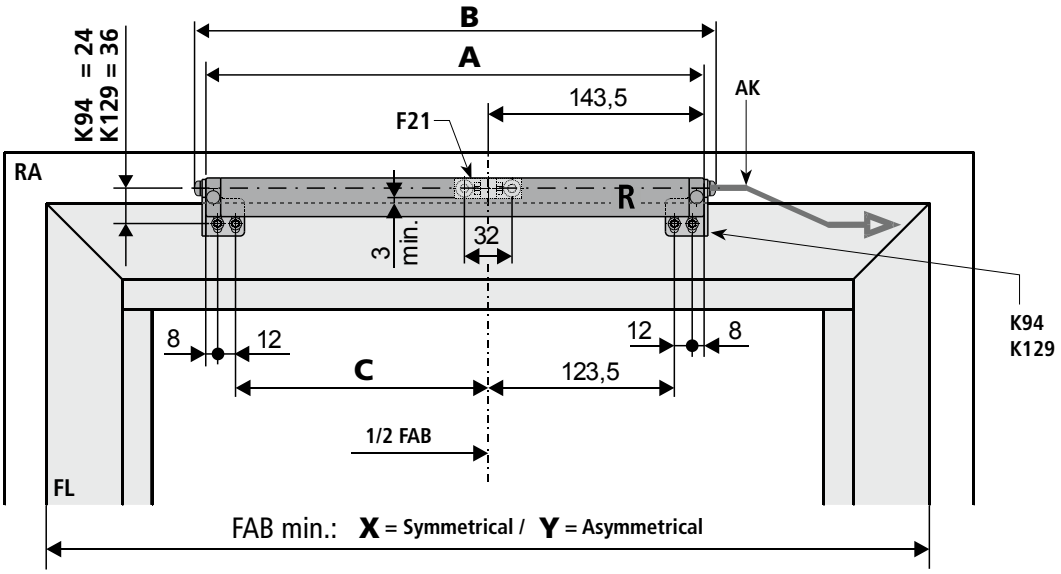

	Stroke 200	Stroke 300	Stroke 400	Stroke 500	Stroke 600	Stroke 800
A	336	381	431	546	546	626
B	350	395	445	560	560	640
C	172,5	217,5	267,5	382,5	382,5	462,5
X	≥ 380	≥ 470	≥ 570	≥ 800	≥ 800	≥ 960
Y	≥ 335	≥ 380	≥ 430	≥ 545	≥ 545	≥ 625

Window versions:

Bottom-hung - inward opening
Top-hung - inward opening
Side-hung - inward opening
Horizontally pivoting casement

Version: left

Version left (L): as right (R), but in mirror image

When mounting two drives (tandem operation), a minimum distance of 50 mm between the drives is considered.

24V Solo application KS2-TWIN xxx (Bottom-hung - inward opening windows)

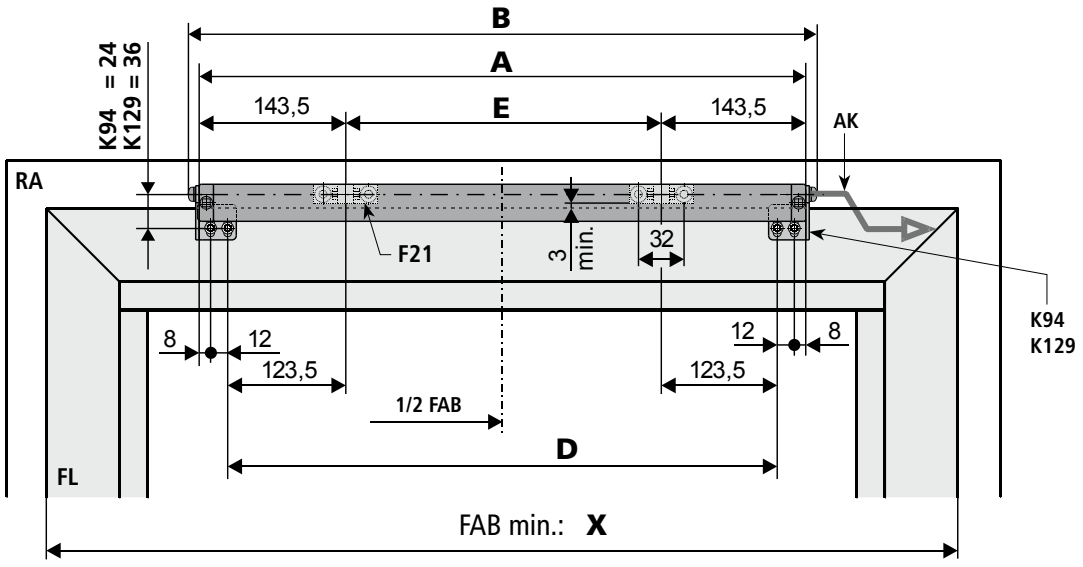

	Stroke 200	Stroke 300	Stroke 400	Stroke 500	Stroke 600	
A	641	831	831	1061	1061	
B	655	845	845	1075	1075	
D	601	791	791	1021	1021	
E	354	544	544	774	774	
X	≥ 640	≥ 830	≥ 830	≥ 1060	≥ 1060	

Window versions:

Bottom-hung - inward opening
Top-hung - inward opening
Side-hung - inward opening
Horizontally pivoting casement

230V Solo application KS2 xxx / Version: right (Bottom-hung - inward opening windows)

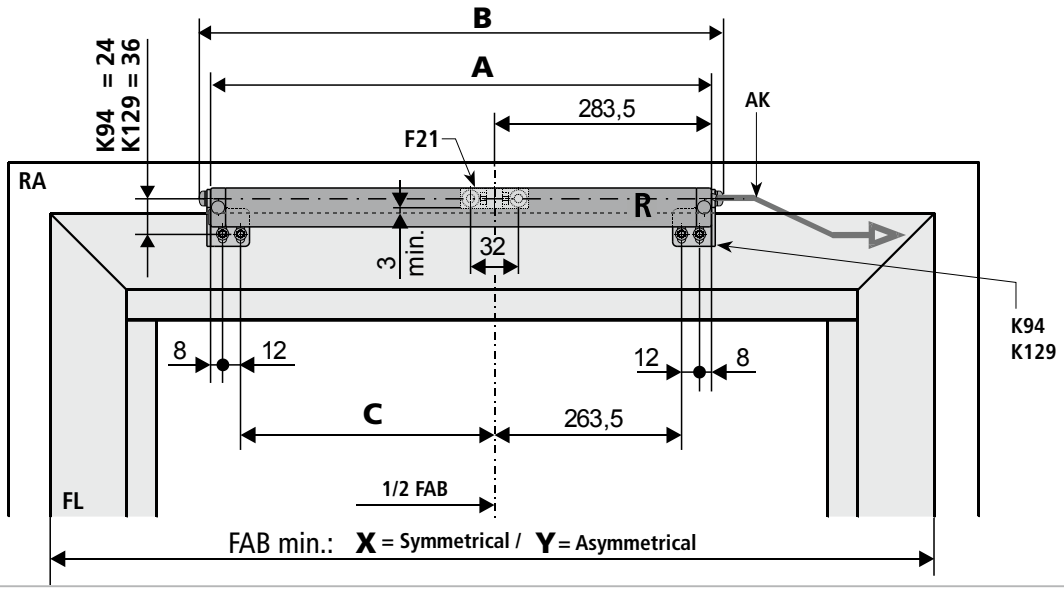

	Stroke 200	Stroke 300	Stroke 400	Stroke 500	Stroke 600	Stroke 800
A	476	521	571	686	686	766
B	490	535	585	700	700	780
C	172,5	217,5	267,5	382,5	382,5	462,5
X	≥ 570	≥ 570	≥ 570	≥ 800	≥ 800	≥ 960
Y	≥ 475	≥ 520	≥ 570	≥ 685	≥ 685	≥ 765

Window versions:

Bottom-hung - inward opening
Top-hung - inward opening
Side-hung - inward opening
Horizontally pivoting casement

Version: left

Version left (L): as right (R), but in mirror image

When mounting two drives (tandem operation), a minimum distance of 50 mm between the drives is considered.

24V 230V Tensile load - Casement assembly (Bottom-hung - inward opening windows)

Frame bracket: K94
Casement bracket: F21
Drive: fixed
Space on the frame: 16 mm

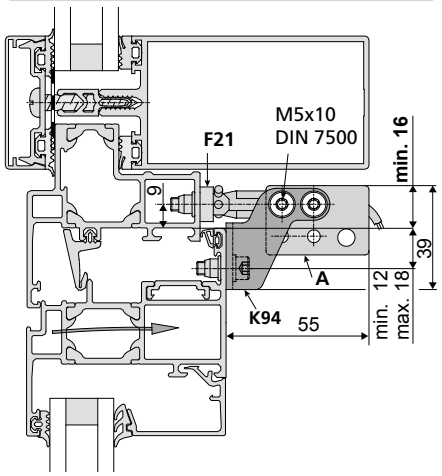

Minimum overall height of casement (FAH)						
Stroke	**200**	**300**	**400**	**500**	**600**	**800**
Height	325	500	750	975	1200	1600

Frame bracket: K94
Casement bracket: F21
Drive: fixed
Space on the frame: 21 mm

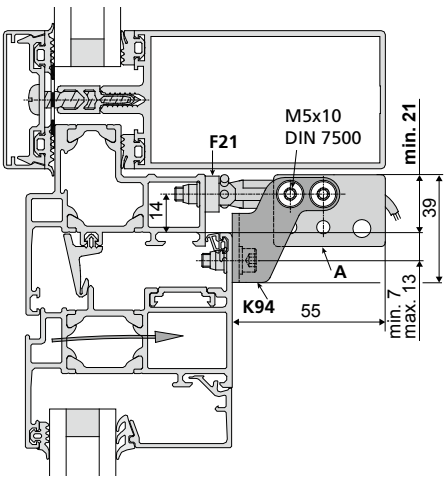

Minimum overall height of casement (FAH)						
Stroke	**200**	**300**	**400**	**500**	**600**	**800**
Height	325	450	550	675	800	1080

Frame bracket: K129
Casement bracket: F21
Drive: fixed
Space on the frame: 25 mm

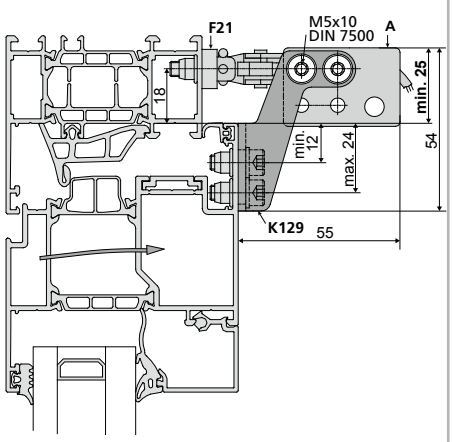

Minimum overall height of casement (FAH)						
Stroke	**200**	**300**	**400**	**500**	**600**	**800**
Height	325	450	550	675	800	1080

INSTALLATION STEP 5B: HOLE LAYOUT FOR CASEMENT BRACKETS F120 / F95

24V Solo application KS2 xxx / Version: right (Bottom-hung - inward opening windows)

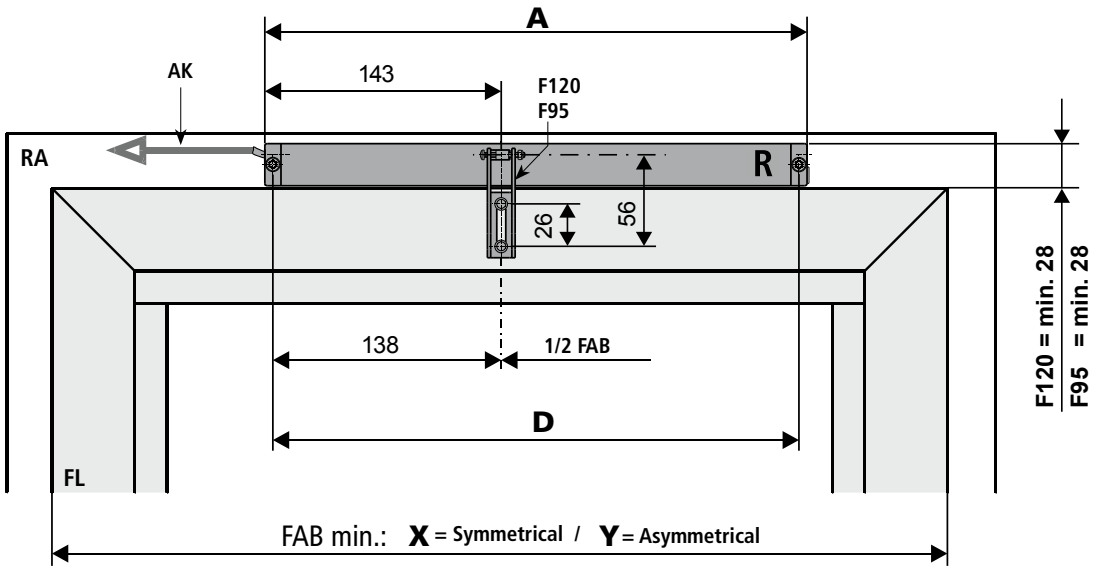

	Stroke 200	Stroke 300	Stroke 400	Stroke 500	Stroke 600	Stroke 800
A	335	380	430	545	545	625
D	325	370	420	535	535	615
X	≥ 380	≥ 470	≥ 570	≥ 800	≥ 800	≥ 960
Y	≥ 335	≥ 380	≥ 430	≥ 545	≥ 545	≥ 625

Window versions:

Bottom-hung - inward opening
Top-hung - inward opening
Side-hung - inward opening
Horizontally pivoting casement

Version: left

Version left (L): as right (R), but in mirror image

When mounting two drives (tandem operation), a minimum distance of 50 mm between the drives is considered.

24V Solo application KS2-TWIN xxx (Bottom-hung - inward opening windows)

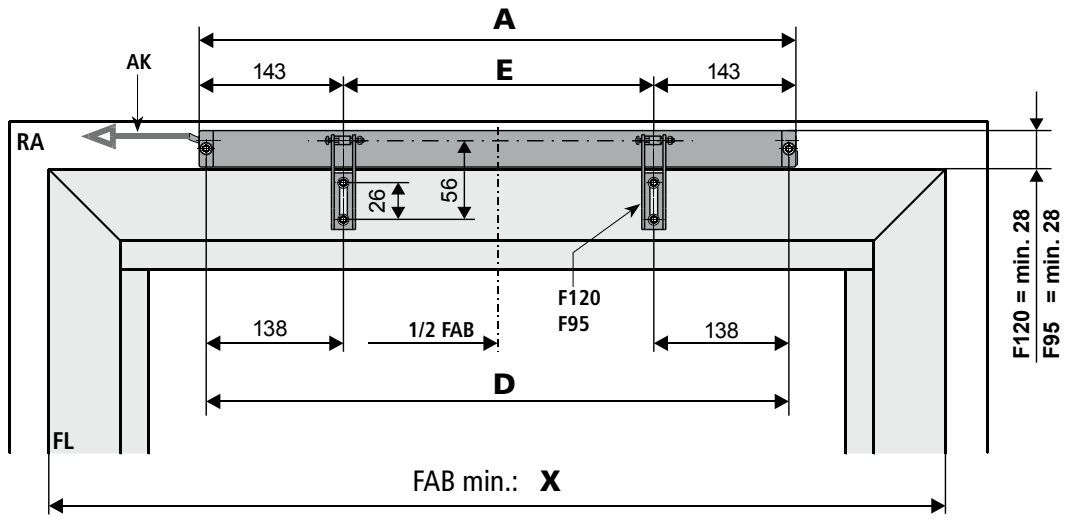

	Stroke 200	Stroke 300	Stroke 400	Stroke 500	Stroke 600	
A	640	830	830	1060	1060	
D	630	820	820	1050	1050	
E	354	544	544	774	774	
X	≥ 640	≥ 830	≥ 830	≥ 1060	≥ 1060	

Window versions:

Bottom-hung - inward opening
Top-hung - inward opening
Side-hung - inward opening
Horizontally pivoting casement

230V Solo application KS2 xxx / Version: right (Bottom-hung - inward opening windows)

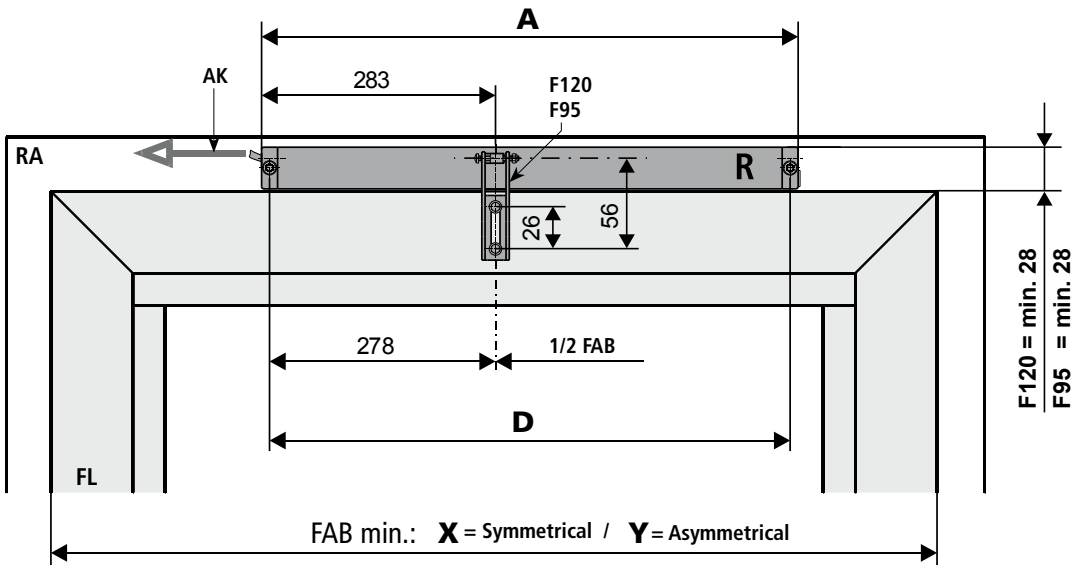

	Stroke 200	Stroke 300	Stroke 400	Stroke 500	Stroke 600	Stroke 800
A	475	520	570	685	685	765
D	465	510	560	675	675	755
X	≥ 570	≥ 570	≥ 570	≥ 800	≥ 800	≥ 960
Y	≥ 475	≥ 520	≥ 570	≥ 685	≥ 685	≥ 765

Window versions:

Bottom-hung - inward opening
Top-hung - inward opening
Side-hung - inward opening
Horizontally pivoting casement

Version: left

Version left (L): as right (R), but in mirror image

When mounting two drives (tandem operation), a minimum distance of 50 mm between the drives is considered.

24V 230V Tensile load - Frame assembly (Bottom-hung - inward opening windows)

Frame bracket: -
Casement bracket: F120
Drive: fixed

Space on the frame: 28 mm

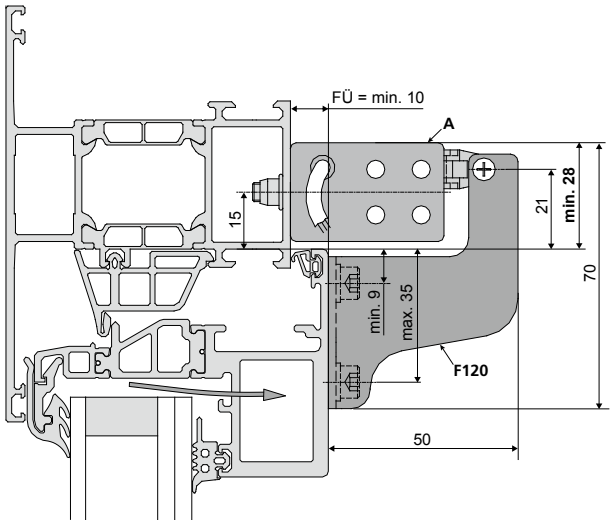

Minimum overall height of casement (FAH)

Stroke	200	300	400	500	600	800
Height	425	500	600	775	950	1250

Frame bracket: -
Casement bracket: F95
Drive: fixed

Space on the frame: 28 mm

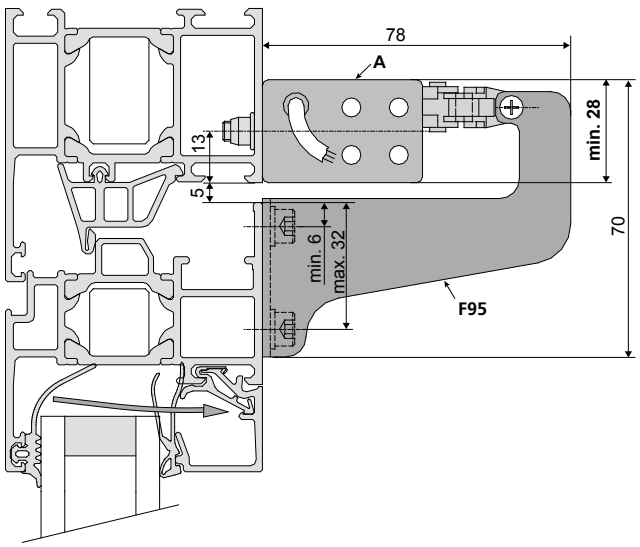

Minimum overall height of casement (FAH)

Stroke	200	300	400	500	600	800
Height	425	500	600	775	950	1250

INSTALLATION STEP 5C: HOLE LAYOUT FOR THE FRAME BRACKET K96-1 AND CASEMENT BRACKET F95

24V Solo application KS2 xxx / Version: right (Bottom-hung - inward opening windows)

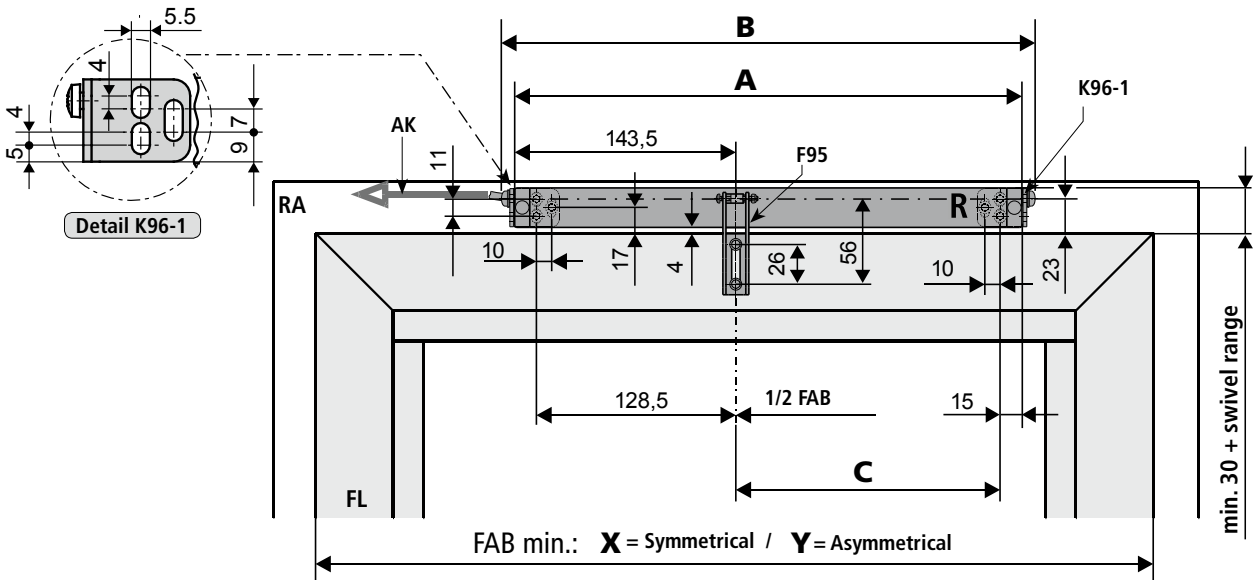

	Stroke 200	Stroke 300	Stroke 400	Stroke 500	Stroke 600	Stroke 800
A	336	381	431	546	546	626
B	350	395	445	560	560	640
C	177,5	222,5	272,5	387,5	387,5	467,5
X	≥ 380	≥ 470	≥ 570	≥ 800	≥ 800	≥ 960
Y	≥ 335	≥ 380	≥ 430	≥ 545	≥ 545	≥ 625

Window versions:
Bottom-hung - inward opening
Side-hung - inward opening
Horizontally pivoting casement
Version: left

Version left (L): as right (R), but in mirror image

When mounting two drives (tandem operation), a minimum distance of 50 mm between the drives is considered.

24V Solo application KS2-TWIN xxx (Bottom-hung - inward opening windows)

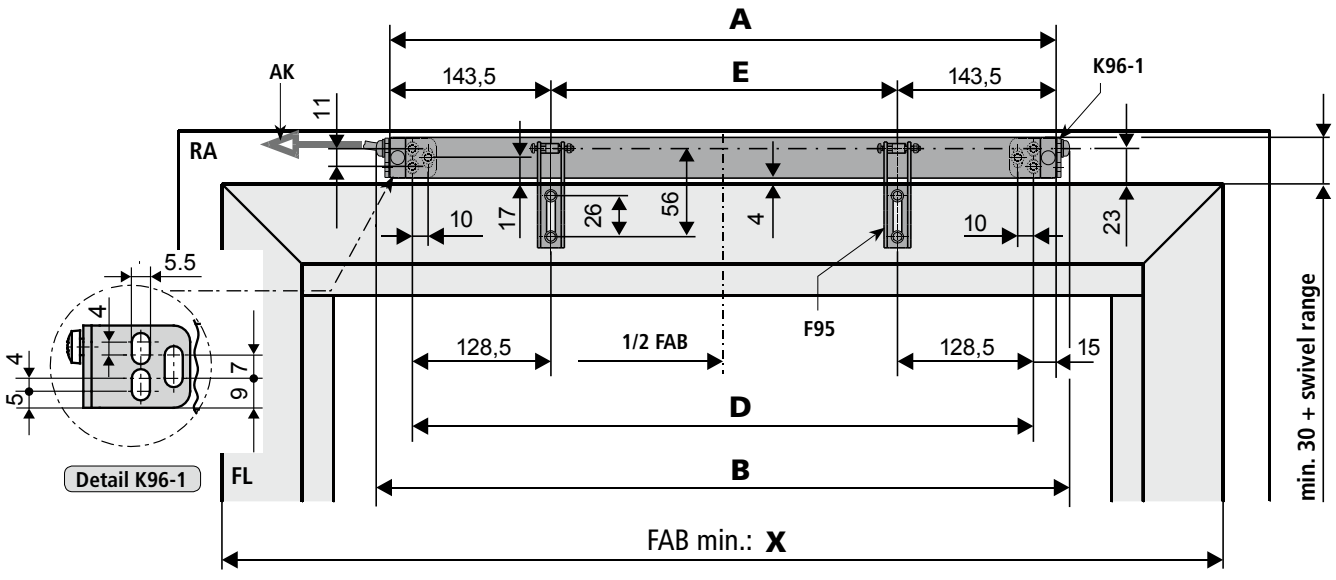

	Stroke 200	Stroke 300	Stroke 400	Stroke 500	Stroke 600	
A	641	831	831	1061	1061	
B	655	845	845	1075	1075	
D	611	801	801	1031	1031	
E	354	544	544	774	774	
X	≥ 640	≥ 830	≥ 830	≥ 1060	≥ 1060	

Window versions:
Bottom-hung - inward opening
Side-hung - inward opening
Horizontally pivoting casement

230V Solo application KS2 xxx / Version: right (Bottom-hung - inward opening windows)

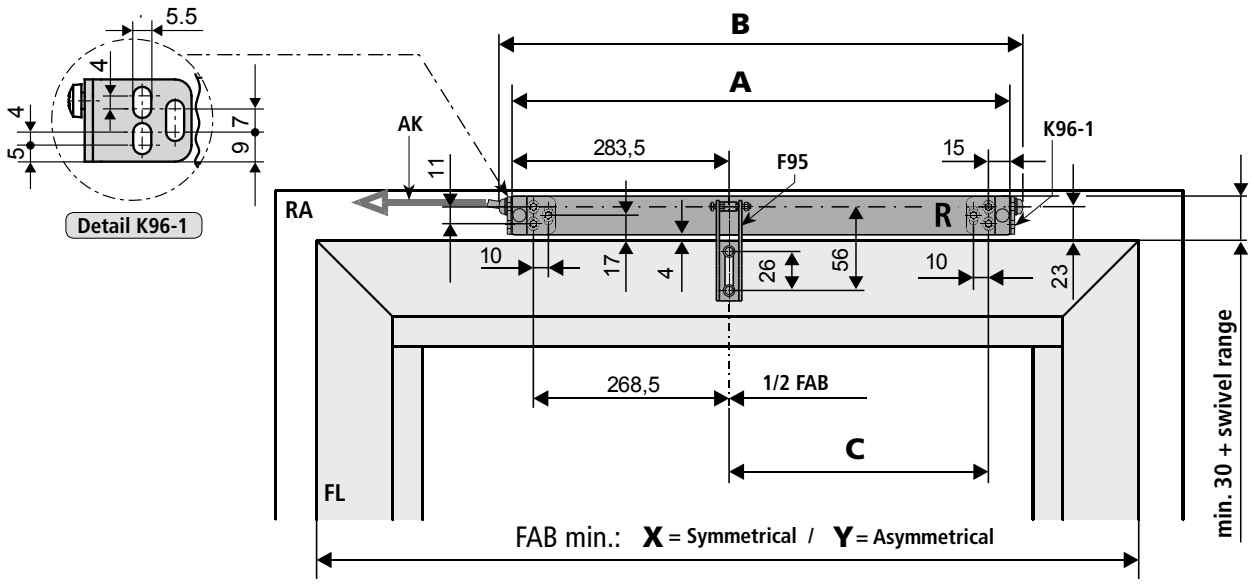

	Stroke 200	Stroke 300	Stroke 400	Stroke 500	Stroke 600	Stroke 800
A	476	521	571	686	686	766
B	490	535	585	700	700	780
C	177,5	222,5	272,5	387,5	387,5	467,5
X	≥ 570	≥ 570	≥ 570	≥ 800	≥ 800	≥ 960
Y	≥ 475	≥ 520	≥ 570	≥ 685	≥ 685	≥ 765

Window versions:

Bottom-hung - inward opening
Side-hung - inward opening
Horizontally pivoting casement

Version: left

Version left (L): as right (R), but in mirror image

When mounting two drives (tandem operation), a minimum distance of 50 mm between the drives is considered.

24V 230V Tensile load - Frame assembly (Bottom-hung - inward opening windows)

Frame bracket: K96-1
Casement bracket: F95
Drive: swiveling

Space on the frame: 30 mm

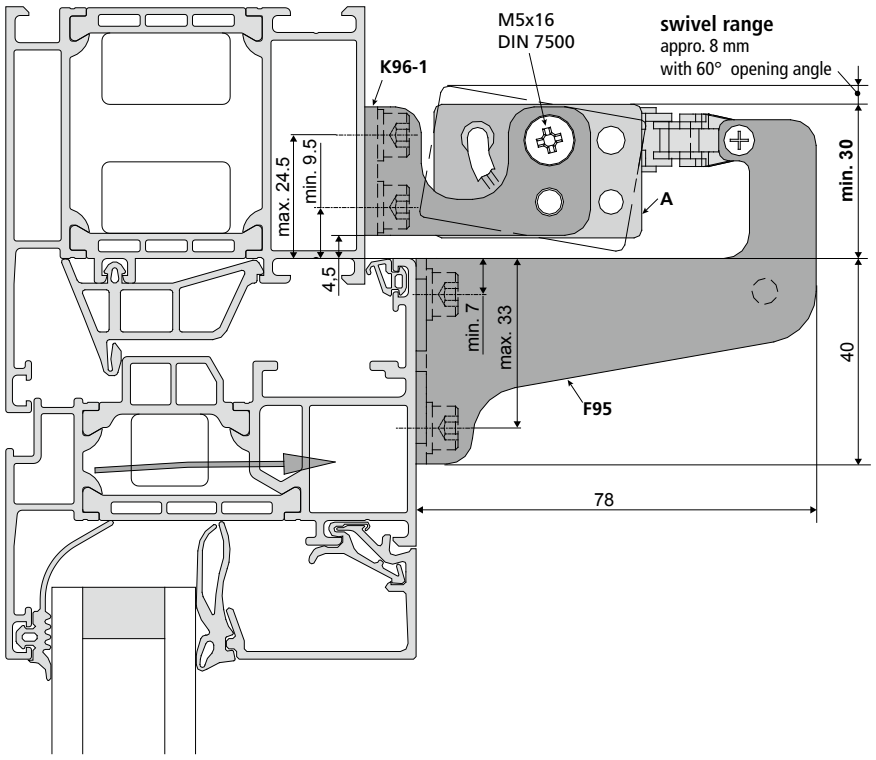

Minimum overall height of casement (FAH)						
Stroke	**200**	**300**	**400**	**500**	**600**	**800**
Height	250	325	400	500	600	800

INSTALLATION STEP 5D: HOLE LAYOUT FOR THE FRAME BRACKET K94 AND CASEMENT BRACKET F21

24V Solo application KS2 xxx / Version: right (Bottom-hung - outward opening windows)

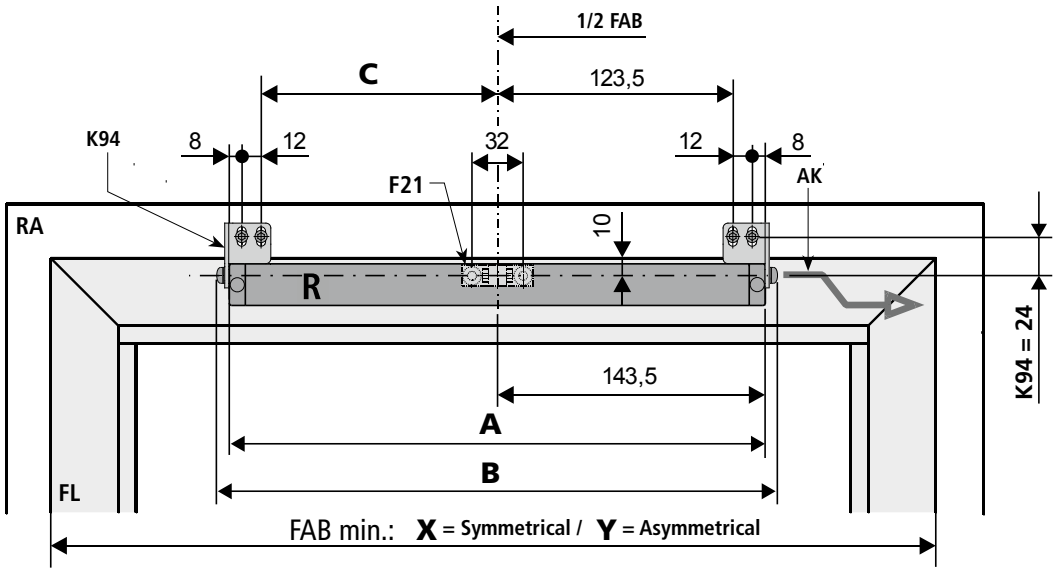

	Stroke 200	Stroke 300	Stroke 400	Stroke 500	Stroke 600	Stroke 800
A	336	381	431	546	546	626
B	350	395	445	560	560	640
C	172,5	217,5	267,5	382,5	382,5	462,5
X	≥ 380	≥ 470	≥ 570	≥ 800	≥ 800	≥ 960
Y	≥ 335	≥ 380	≥ 430	≥ 545	≥ 545	≥ 625

Window versions:

Bottom hung - outward opening
Top hung - outward opening
Side-hung - outward opening
Horizontally pivoting casement
Projecting top-hung casement
Version: left

Version left (L): as right (R), but in mirror image

When mounting two drives (tandem operation), a minimum distance of 50 mm between the drives is considered.

24V Solo application KS2-TWIN xxx (Bottom-hung - outward opening windows)

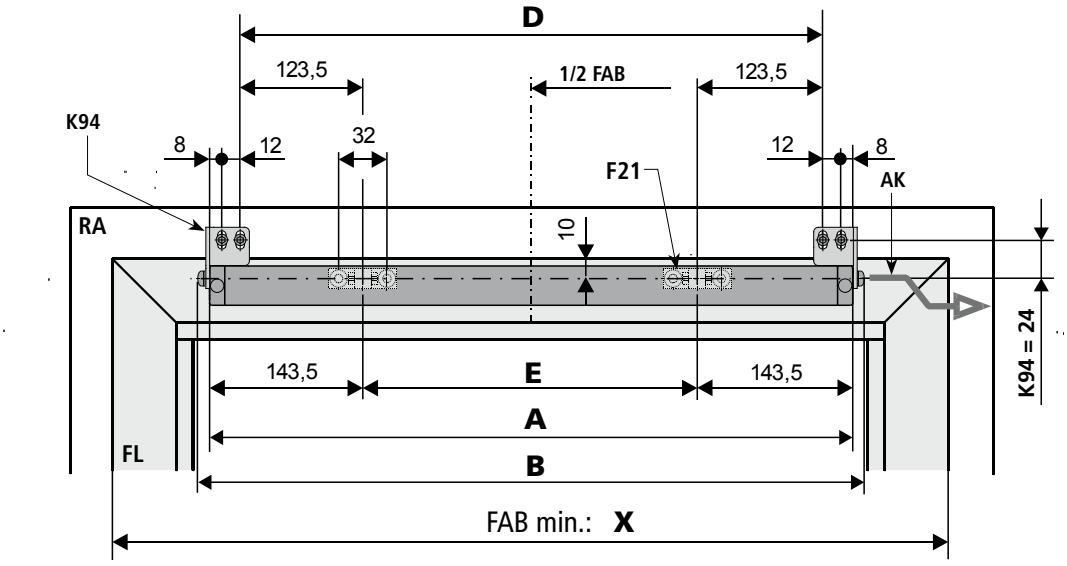

	Stroke 200	Stroke 300	Stroke 400	Stroke 500	Stroke 600	
A	641	831	831	1061	1061	
B	655	845	845	1075	1075	
D	601	791	791	1021	1021	
E	354	544	544	774	774	
X	≥ 640	≥ 830	≥ 830	≥ 1060	≥ 1060	

Window versions:

Bottom hung - outward opening
Top hung - outward opening
Side-hung - outward opening
Horizontally pivoting casement
Projecting top-hung casement

230V Solo application KS2 xxx / Version: right (Bottom-hung - outward opening windows)

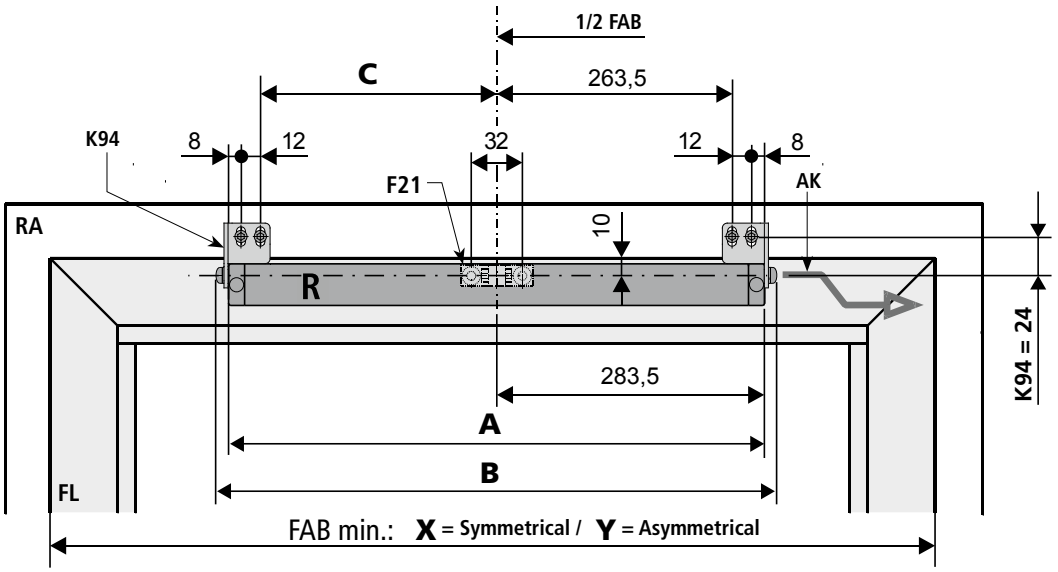

	Stroke 200	Stroke 300	Stroke 400	Stroke 500	Stroke 600	Stroke 800
A	476	521	571	686	686	766
B	490	535	585	700	700	780
C	172,5	217,5	267,5	382,5	382,5	462,5
X	≥ 570	≥ 570	≥ 570	≥ 800	≥ 800	≥ 960
Y	≥ 475	≥ 520	≥ 570	≥ 685	≥ 685	≥ 765

Window versions:

Bottom hung - outward opening
Top hung - outward opening
Side-hung - outward opening
Horizontally pivoting casement
Projecting top-hung casement
Version: left

Version left (L): as right (R), but in mirror image

When mounting two drives (tandem operation), a minimum distance of 50 mm between the drives is considered.

24V 230V Tensile load - Frame assembly (Bottom-hung - outward opening windows)

Frame bracket: K94
Casement bracket: F21
Drive: fixed

Space on the frame: 22 mm

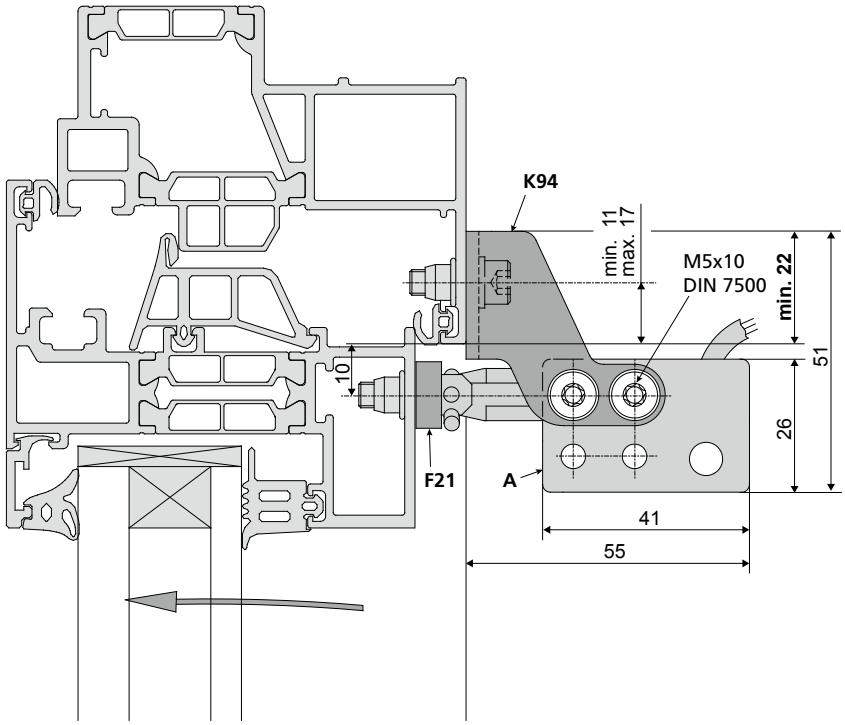

Minimum overall height of casement (FAH)						
Stroke	**200**	**300**	**400**	**500**	**600**	**800**
Height	325	450	550	675	800	1080

INSTALLATION STEP 5E: HOLE LAYOUT FOR THE FRAME BRACKET K130 UND CASEMENT BRACKET F21

24V Solo application KS2 xxx / Version: right (Top-hung - outward opening windows)

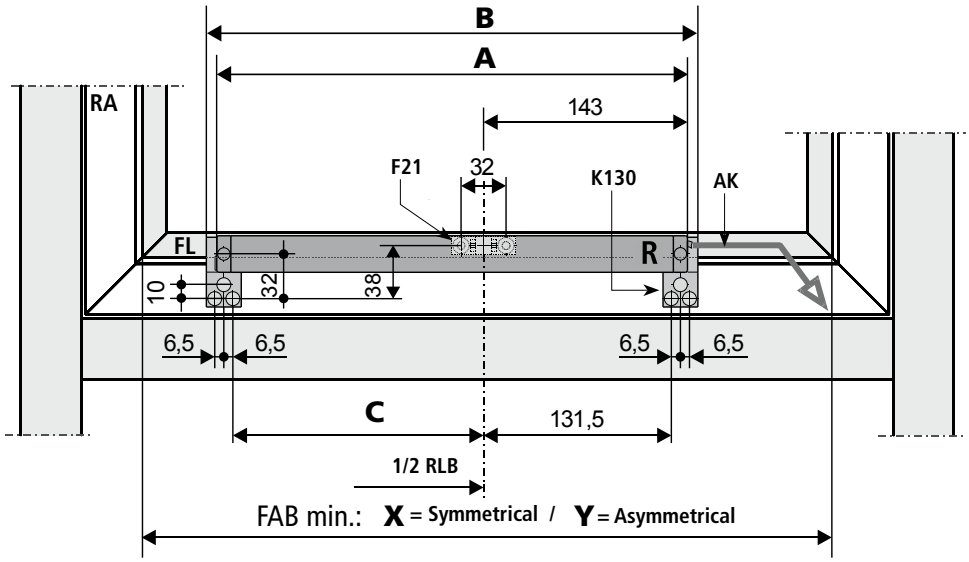

	Stroke 200	Stroke 300	Stroke 400	Stroke 500		
A	335	380	430	545		
B	350	395	445	560		
C	180,5	225,5	275,5	390,5		
X	≥ 395	≥ 485	≥ 585	≥ 815		
Y	≥ 350	≥ 395	≥ 445	≥ 560		

Window versions:
Top hung - outward opening
Roof top-hung
Projecting top-hung casement

Version: left

Version left (L): as right (R), but in mirror image

When mounting two drives (tandem operation), a minimum distance of 50 mm between the drives is considered.

24V Solo application KS2-TWIN xxx (Top-hung - outward opening windows)

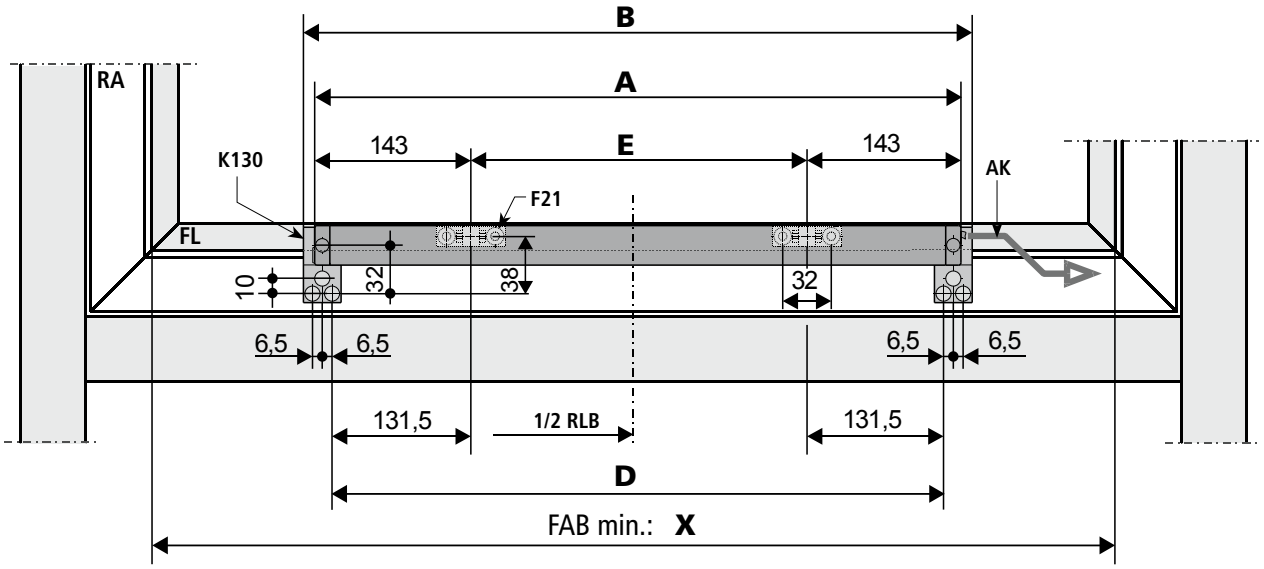

	Stroke 200	Stroke 300	Stroke 400	Stroke 500		
A	640	830	830	1060		
B	655	845	845	1075		
D	617	807	807	1037		
E	354	544	544	774		
X	≥ 655	≥ 845	≥ 845	≥ 1075		

Window versions:
Top hung - outward opening
Roof top-hung
Projecting top-hung casement

230V Solo application KS2 xxx / Version: right (Top-hung - outward opening windows)

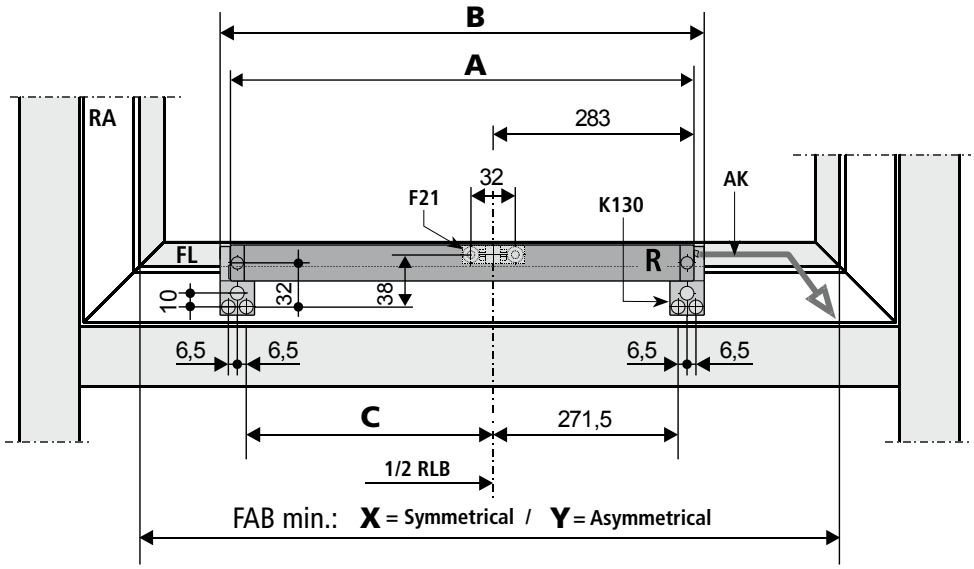

	Stroke 200	Stroke 300	Stroke 400	Stroke 500		
A	475	520	570	685		
B	490	535	585	700		
C	180,5	225,5	275,5	390,5		
X	≥ 585	≥ 585	≥ 585	≥ 815		
Y	≥ 490	≥ 535	≥ 585	≥ 700		

Window versions:

Top hung - outward opening
Roof top-hung
Projecting top-hung casement

Version: left

Version left (L): as right (R), but in mirror image

When mounting two drives (tandem operation), a minimum distance of 50 mm between the drives is considered.

24V 230V Pressure load - Frame assembly (Top-hung - outward opening windows)

Frame bracket: K130
Casement bracket: F21
Drive: fixed

Space on the frame: 22 mm

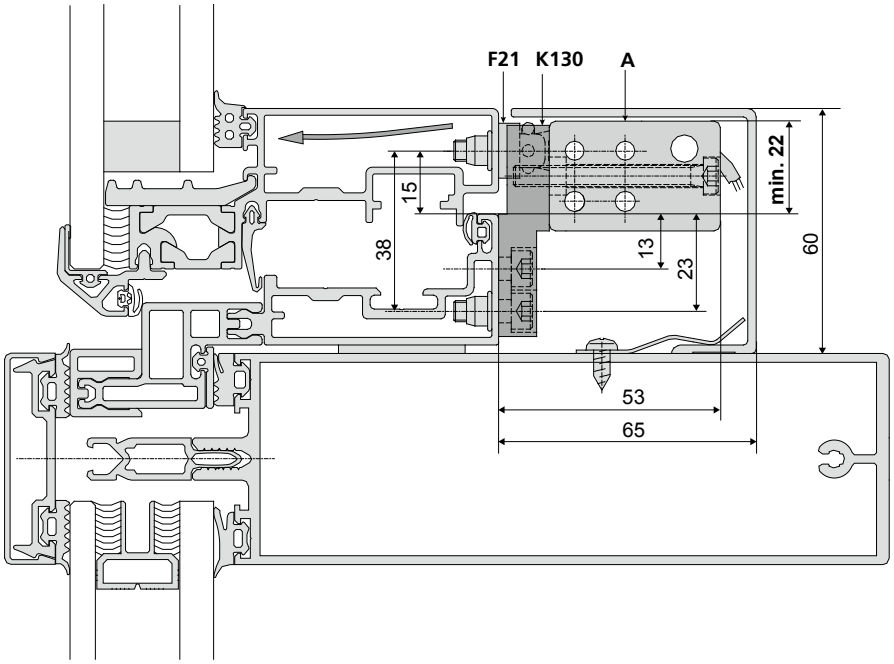

Minimum overall height of casement (FAH)				
Stroke	**200**	**300**	**400**	**500**
Height	350	400	450	600

INSTALLATION STEP 5F: HOLE LAYOUT FOR THE FRAME BRACKET K94 AND CASEMENT BRACKET F21

24V Solo application KS2 xxx / Version: right (Top-hung - outward opening windows)

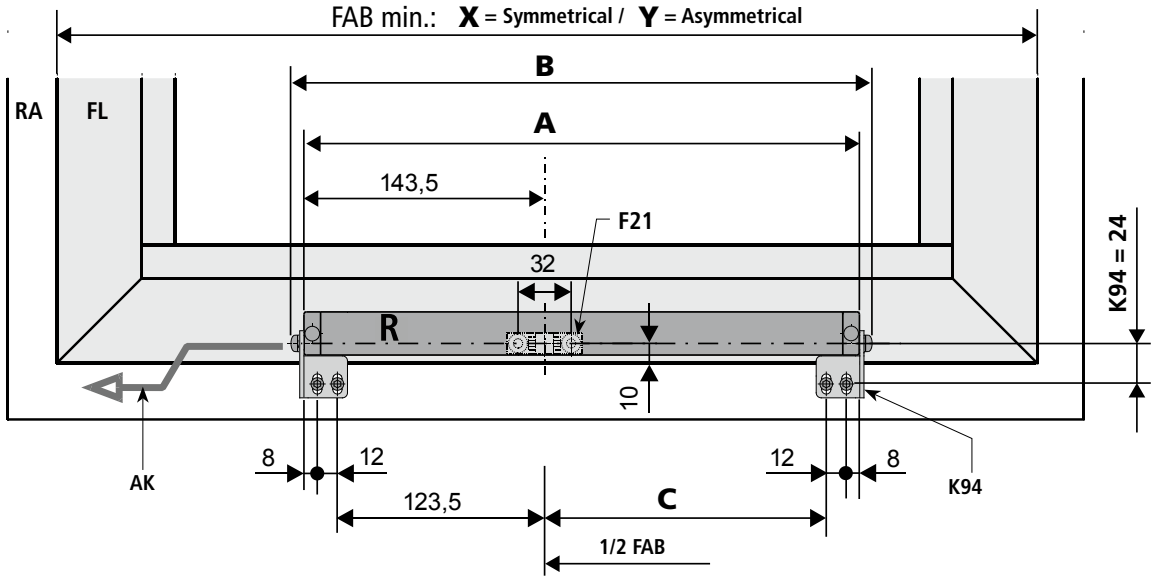

	Stroke 200	Stroke 300	Stroke 400	Stroke 500		
A	336	381	431	546		
B	350	395	445	560		
C	172,5	217,5	267,5	382,5		
X	≥ 380	≥ 470	≥ 570	≥ 800		
Y	≥ 335	≥ 380	≥ 430	≥ 545		

Window versions:

Bottom hung - outward opening
Top hung - outward opening
Side-hung - outward opening
Horizontally pivoting casement
Projecting top-hung casement

Version: left

Version left (L): as right (R), but in mirror image

When mounting two drives (tandem operation), a minimum distance of 50 mm between the drives is considered.

24V Solo application KS2-TWIN xxx (Top-hung - outward opening windows)

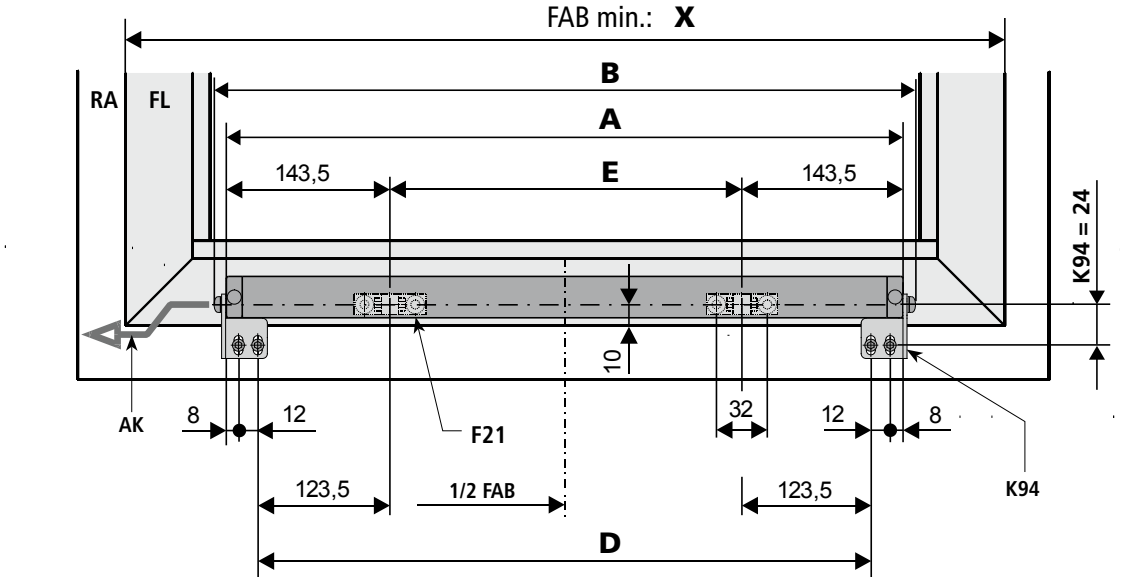

	Stroke 200	Stroke 300	Stroke 400	Stroke 500		
A	641	831	831	1061		
B	655	845	845	1075		
D	601	791	791	1021		
E	354	544	544	774		
X	≥ 640	≥ 830	≥ 830	≥ 1060		

Window versions:

Bottom hung - outward opening
Top hung - outward opening
Side-hung - outward opening
Horizontally pivoting casement
Projecting top-hung casement

230V Solo application KS2 xxx / Version: right (Top-hung - outward opening windows)

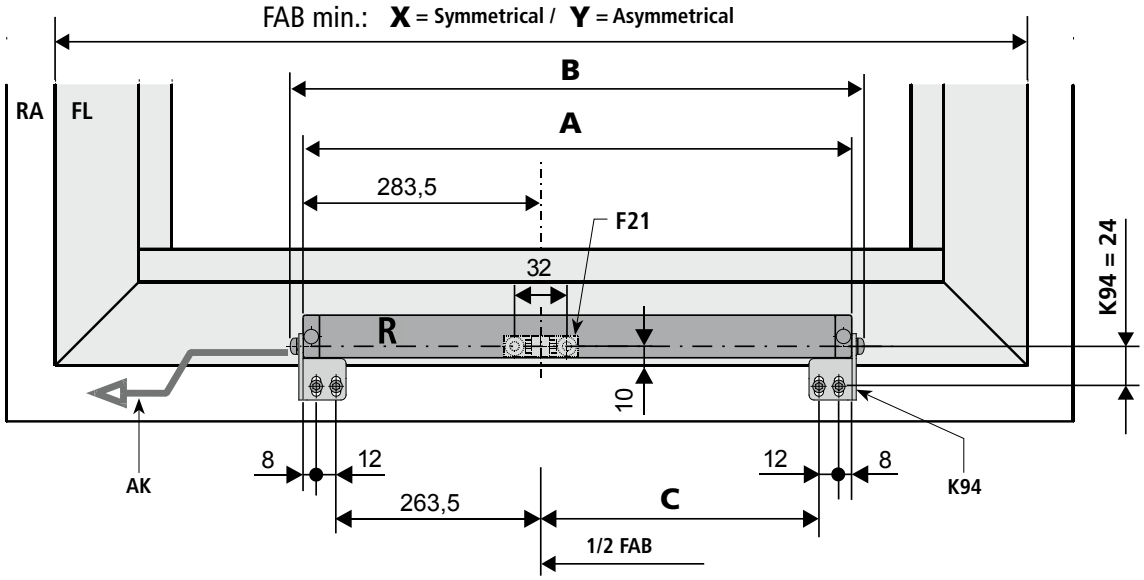

	Stroke 200	Stroke 300	Stroke 400	Stroke 500		
A	476	521	571	686		
B	490	535	585	700		
C	172,5	217,5	267,5	382,5		
X	≥ 570	≥ 570	≥ 570	≥ 800		
Y	≥ 475	≥ 520	≥ 570	≥ 685		

Window versions:

Bottom hung - outward opening
Top hung - outward opening
Side-hung - outward opening
Horizontally pivoting casement
Projecting top-hung casement
Version: left

Version left (L): as right (R), but in mirror image

When mounting two drives (tandem operation), a minimum distance of 50 mm between the drives is considered.

24V 230V Pressure load - Frame assembly (Top-hung - outward opening windows)

Frame bracket: K94
Casement bracket: F21
Drive: fixed

Space on the frame: 22 mm

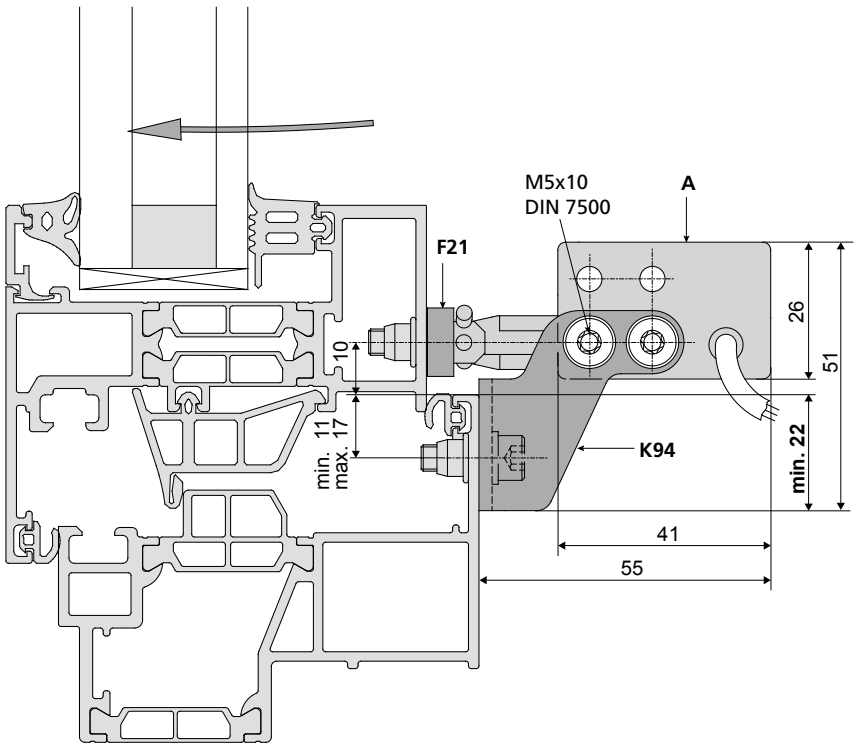

Minimum overall height of casement (FAH)				
Stroke	**200**	**300**	**400**	**500**
Height	350	400	450	600

INSTALLATION STEP 5G: HOLE LAYOUT FOR THE FRAME BRACKETS K94 UND CASEMENT BRACKET F21

24V Solo application KS2 xxx / Version: right (Top-hung - outward opening windows)

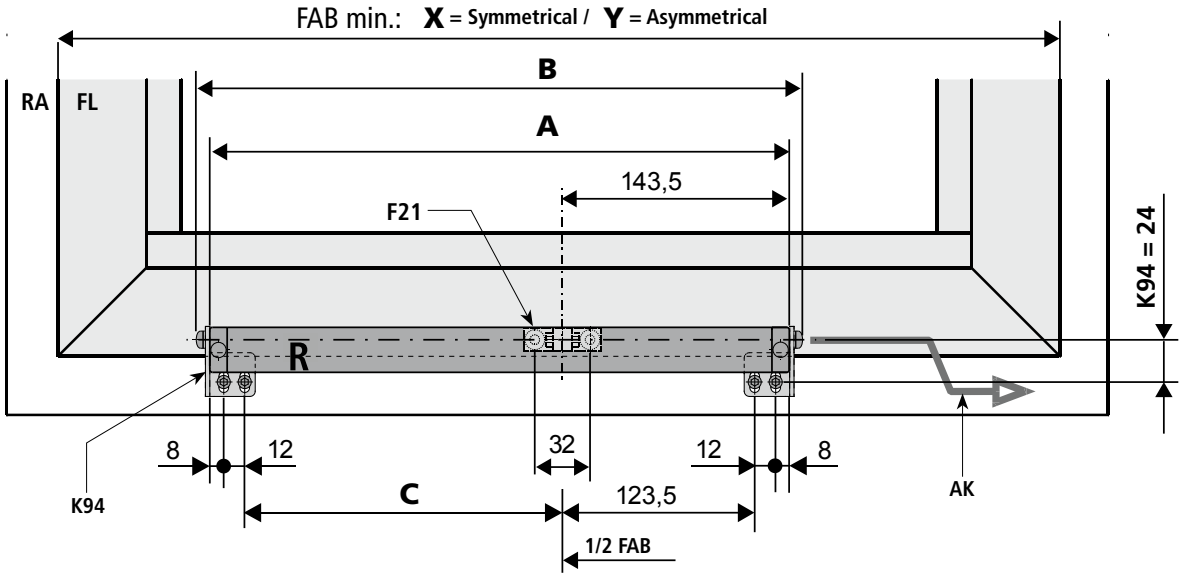

	Stroke 200	Stroke 300	Stroke 400	Stroke 500		
A	336	381	431	546		
B	350	395	445	560		
C	172,5	217,5	267,5	382,5		
X	≥ 380	≥ 470	≥ 570	≥ 800		
Y	≥ 335	≥ 380	≥ 430	≥ 545		

Window versions:

Bottom hung - outward opening
Top hung - outward opening
Side-hung - outward opening
Horizontally pivoting casement
Projecting top-hung casement

Version: left

Version left (L): as right (R), but in mirror image

When mounting two drives (tandem operation), a minimum distance of 50 mm between the drives is considered.

24V Solo application KS2-TWIN xxx (Top-hung - outward opening windows)

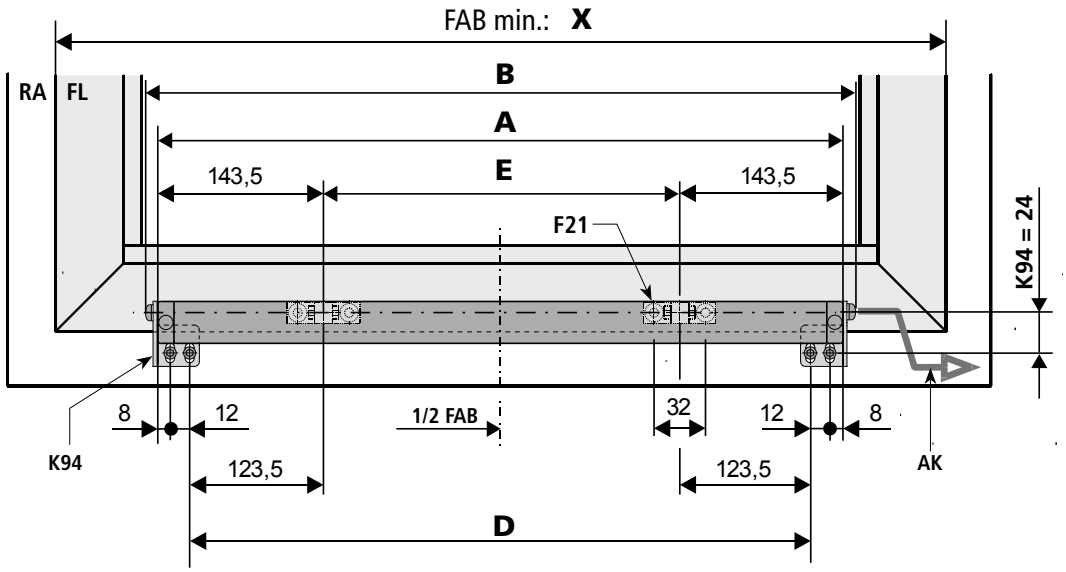

	Stroke 200	Stroke 300	Stroke 400	Stroke 500		
A	641	831	831	1061		
B	655	845	845	1075		
D	601	791	791	1021		
E	354	544	544	774		
X	≥ 640	≥ 830	≥ 830	≥ 1060		

Window versions:

Bottom hung - outward opening
Top hung - outward opening
Side-hung - outward opening
Horizontally pivoting casement
Projecting top-hung casement

230V Solo application KS2 xxx / Version: right (Top-hung - outward opening windows)

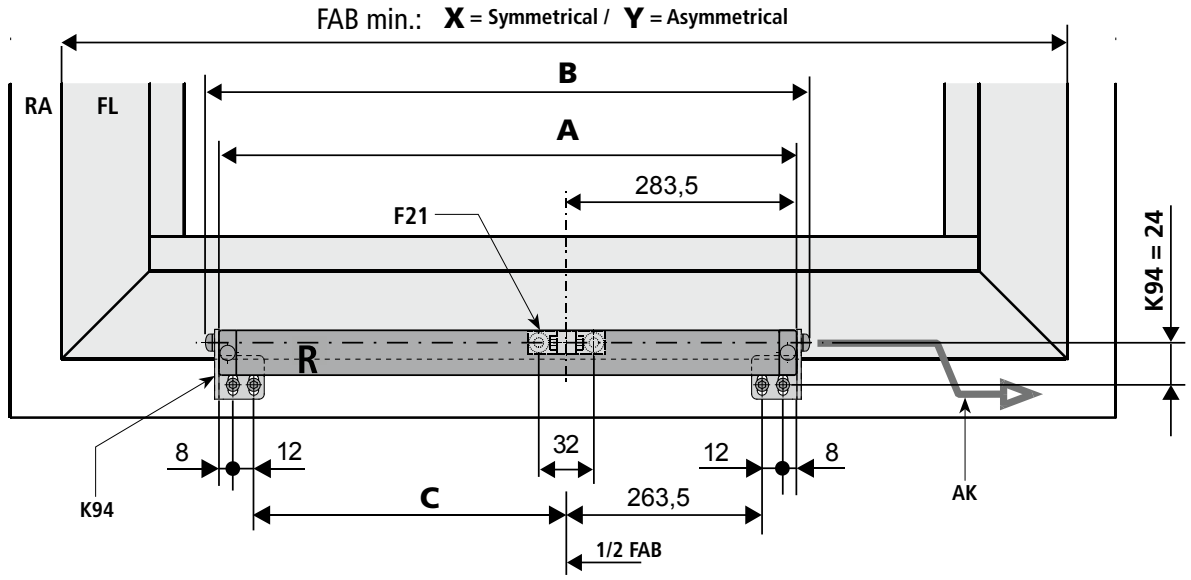

	Stroke 200	Stroke 300	Stroke 400	Stroke 500		
A	476	521	571	686		
B	490	535	585	700		
C	172,5	217,5	267,5	382,5		
X	≥ 570	≥ 570	≥ 570	≥ 800		
Y	≥ 475	≥ 520	≥ 570	≥ 685		

Window versions:

Bottom hung - outward opening
Top hung - outward opening
Side-hung - outward opening
Horizontally pivoting casement
Projecting top-hung casement
Version: left

Version left (L): as right (R), but in mirror image

When mounting two drives (tandem operation), a minimum distance of 50 mm between the drives is considered.

24V 230V Pressure load - Frame assembly (Top-hung - outward opening windows)

Frame bracket: K94
Casement bracket: F21
Drive: fixed, rotated 180°

Space on the frame: 22 mm

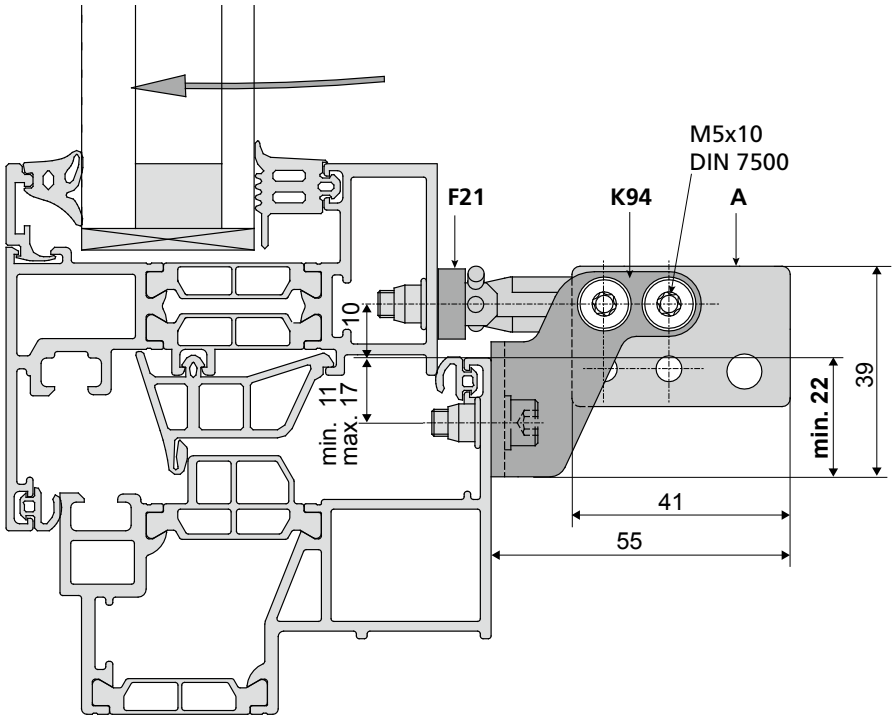

Minimum overall height of casement (FAH)				
Stroke	**200**	**300**	**400**	**500**
Height	400	500	700	800

INSTALLATION STEP 5H: HOLE LAYOUT FOR THE FRAME BRACKETS K128 AND CASEMENT BRACKET F21

24V Solo application KS2 xxx / Version: right (Top-hung - outward opening windows)

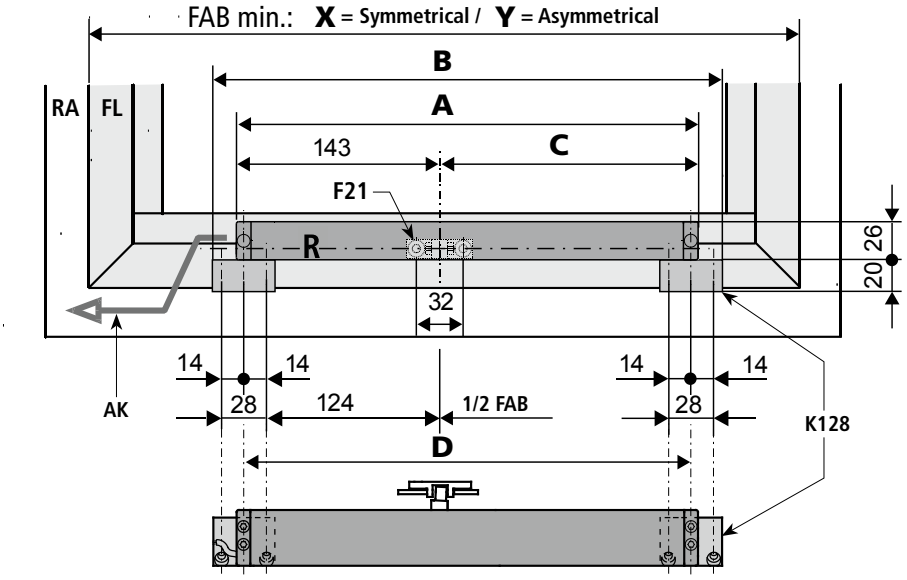

	Stroke 200	Stroke 300	Stroke 400	Stroke 500		
A	335	380	430	545		
B	365	410	460	575		
C	192	237	287	402		
D	325	370	420	535		
X	≥ 410	≥ 500	≥ 600	≥ 830		
Y	≥ 365	≥ 410	≥ 460	≥ 575		

Window versions:

Bottom hung	- outward opening	Version: left
Top hung	- outward opening	
Side-hung	- outward opening	

Version left (L): as right (R), but in mirror image

When mounting two drives (tandem operation), a minimum distance of 50 mm between the drives is considered.

24V Solo application KS2-TWIN xxx (Top-hung - outward opening windows)

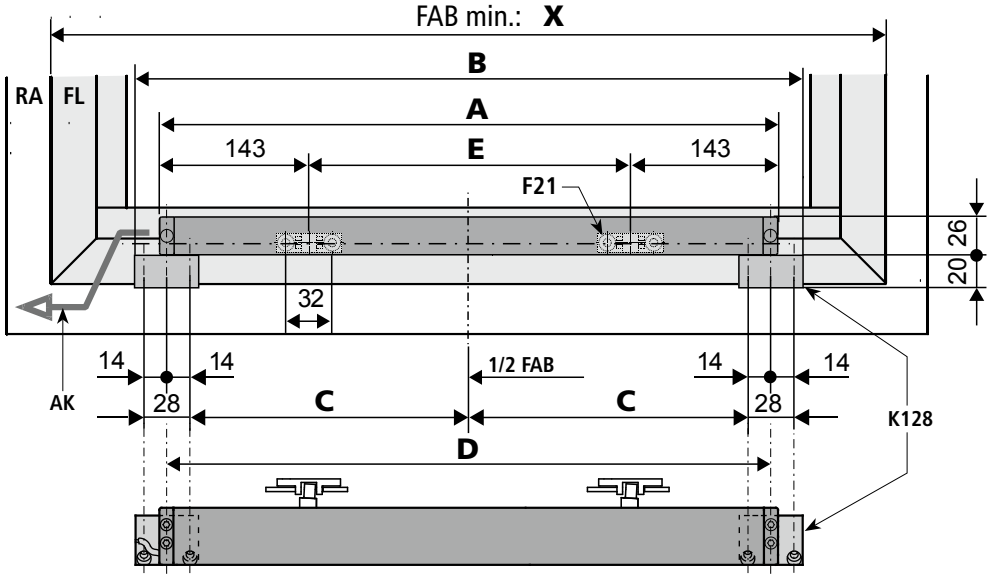

	Stroke 200	Stroke 300	Stroke 400	Stroke 500		
A	640	830	830	1060		
B	670	860	860	1090		
C	301	396	396	511		
D	630	820	820	1050		
E	354	544	544	774		
X	≥ 640	≥ 830	≥ 830	≥ 1060		

Window versions:

Bottom hung	- outward opening
Top hung	- outward opening
Side-hung	- outward opening

230V Solo application KS2 xxx / Version: right (Top-hung - outward opening windows)

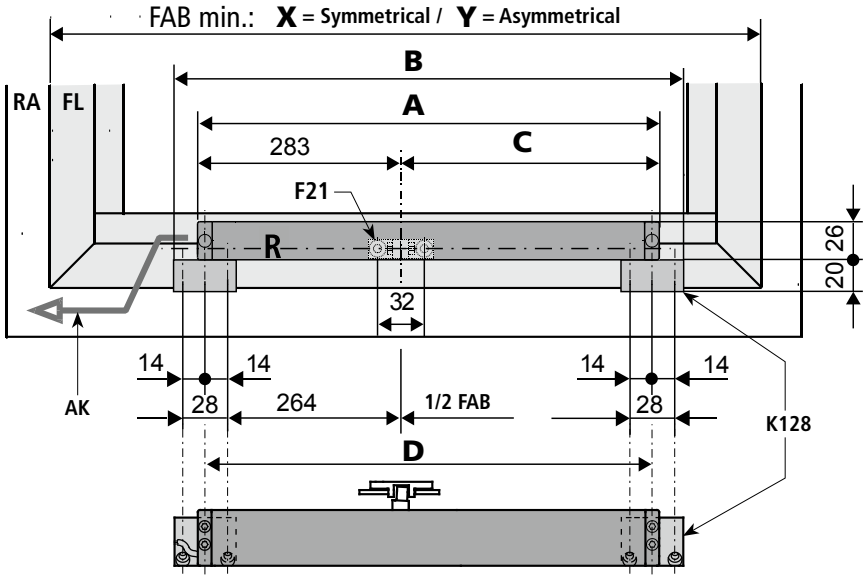

	Stroke 200	Stroke 300	Stroke 400	Stroke 500		
A	475	520	570	685		
B	505	550	600	715		
C	192	237	287	402		
D	465	510	560	675		
X	≥ 600	≥ 600	≥ 600	≥ 830		
Y	≥ 505	≥ 550	≥ 600	≥ 715		

Window versions:

Bottom hung	- outward opening	Version: left
Top hung	- outward opening	
Side-hung	- outward opening	

Version left (L): as right (R), but in mirror image

When mounting two drives (tandem operation), a minimum distance of 50 mm between the drives is considered.

24V 230V Pressure load - Frame assembly (Top-hung - outward opening windows)

Frame bracket: K128
Casement bracket: F21
Drive: fixed

Assembly on Schüco AWS 57RO

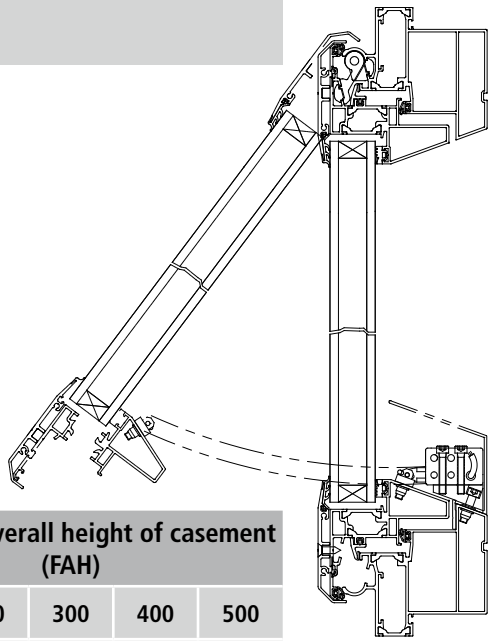

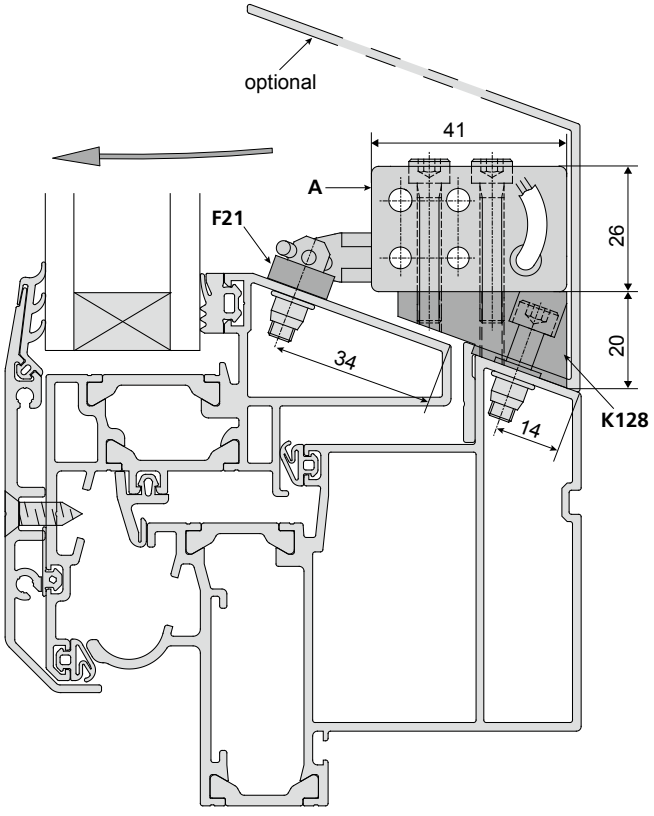

Minimum overall height of casement (FAH)				
Stroke	**200**	**300**	**400**	**500**
Height	450	500	550	700

INSTALLATION STEP 5I: HOLE LAYOUT FOR CASEMENT BRACKETS F120 / F95

24V Solo application KS2 xxx / Version: right (Top-hung - inward opening windows)

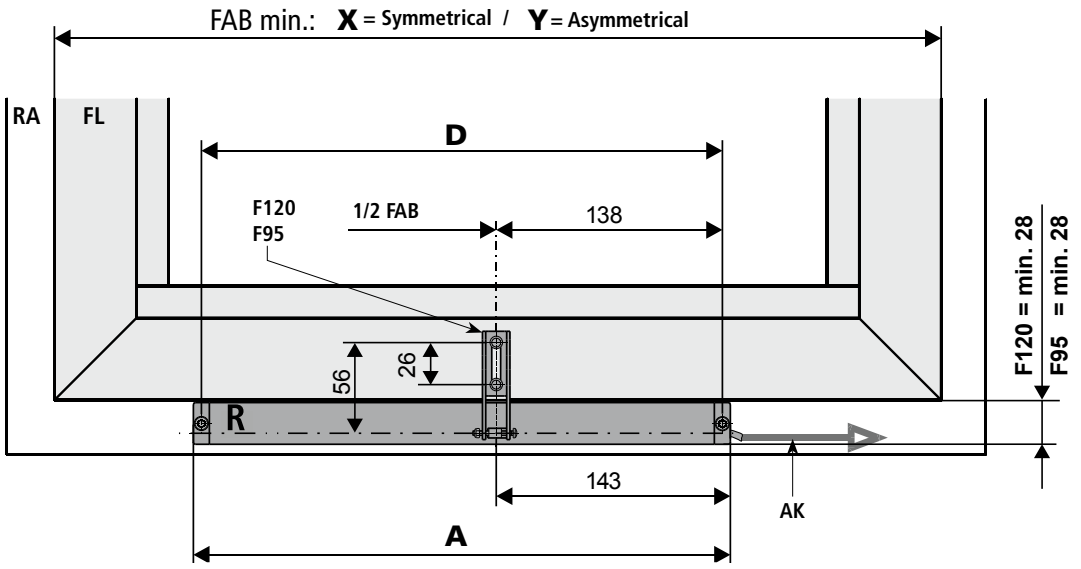

	Stroke 200	Stroke 300	Stroke 400	Stroke 500		
A	335	380	430	545		
D	325	370	420	535		
X	≥ 380	≥ 470	≥ 570	≥ 800		
Y	≥ 335	≥ 380	≥ 430	≥ 545		

Window versions:
Bottom-hung - inward opening
Top-hung - inward opening
Side-hung - inward opening
Horizontally pivoting casement

Version: left

Version left (L): as right (R), but in mirror image

When mounting two drives (tandem operation), a minimum distance of 50 mm between the drives is considered.

24V Solo application KS2-TWIN xxx (Top-hung - inward opening windows)

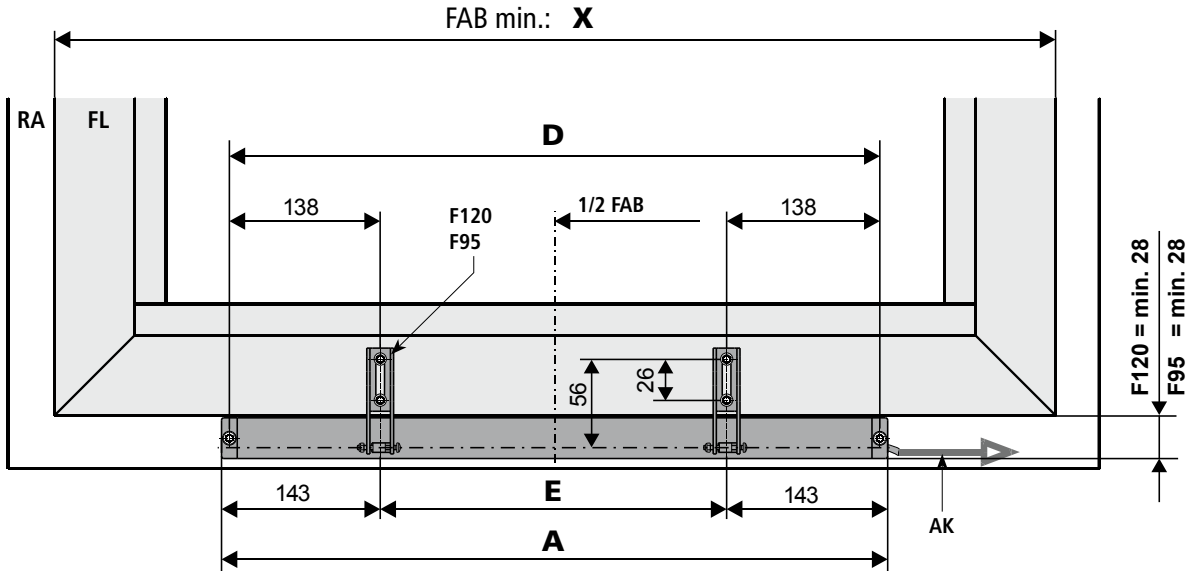

	Stroke 200	Stroke 300	Stroke 400	Stroke 500		
A	640	830	830	1060		
D	630	820	820	1050		
E	354	544	544	774		
X	≥ 640	≥ 830	≥ 830	≥ 1060		

Window versions:
Bottom-hung - inward opening
Top-hung - inward opening
Side-hung - inward opening
Horizontally pivoting casement

230V Solo application KS2 xxx / Version: right (Top-hung - inward opening windows)

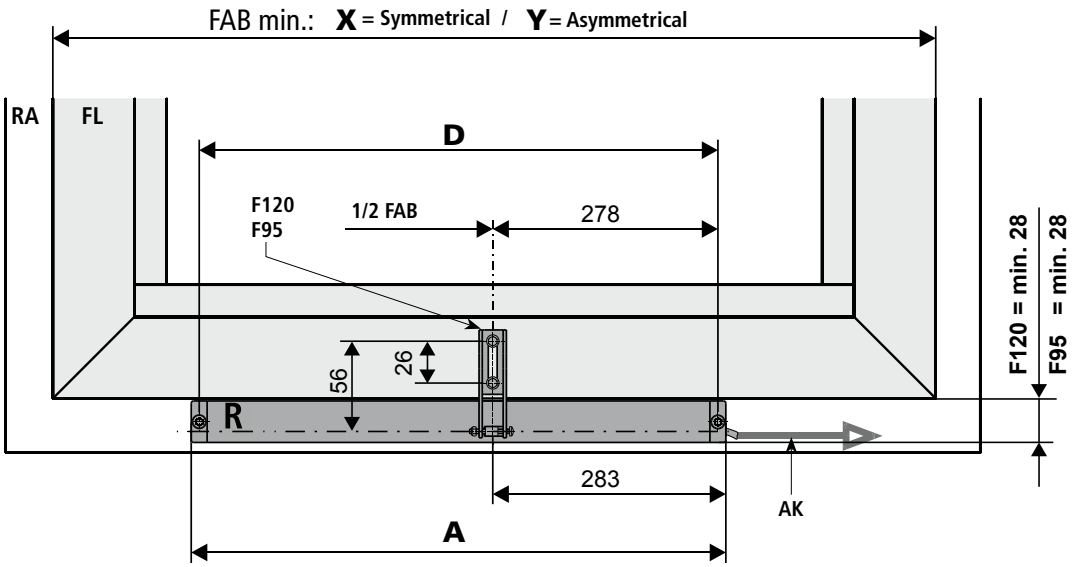

	Stroke 200	Stroke 300	Stroke 400	Stroke 500		
A	475	520	570	685		
D	465	510	560	675		
X	≥ 570	≥ 570	≥ 570	≥ 800		
Y	≥ 475	≥ 520	≥ 570	≥ 685		

Window versions:

Bottom-hung - inward opening
Top-hung - inward opening
Side-hung - inward opening
Horizontally pivoting casement

Version: left

Version left (L): as right (R), but in mirror image

When mounting two drives (tandem operation), a minimum distance of 50 mm between the drives is considered.

24V 230V Pressure load - Frame assembly (Top-hung - inward opening windows)

Frame bracket: -
Casement bracket: F120
Drive: fixed

Space on the frame: 28 mm

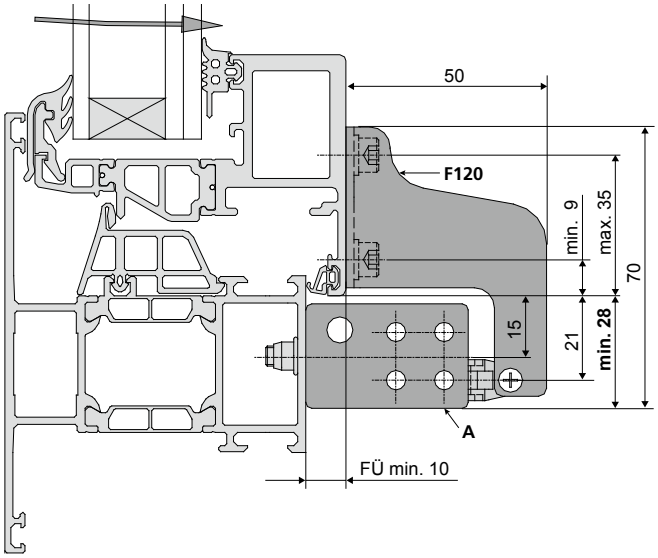

Minimum overall height of casement (FAH)				
Stroke	**200**	**300**	**400**	**500**
Height	350	400	450	700

Frame bracket: -
Casement bracket: F95
Drive: fixed

Space on the frame: 28 mm

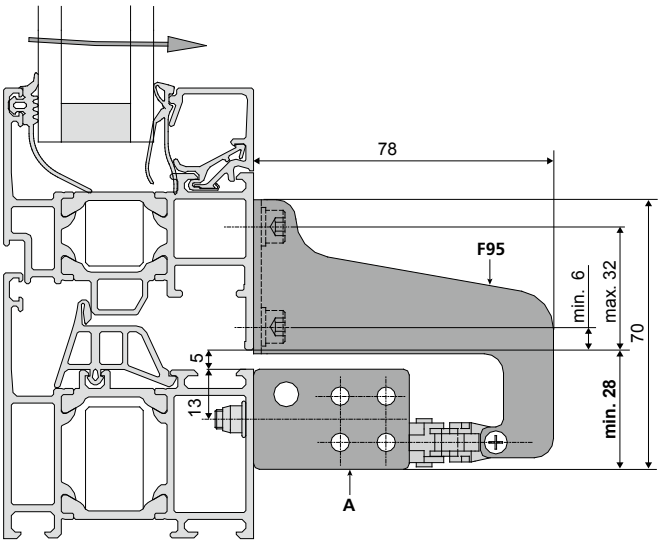

Minimum overall height of casement (FAH)				
Stroke	**200**	**300**	**400**	**500**
Height	350	400	450	700

INSTALLATION STEP 5J: HOLE LAYOUT FOR THE FRAME BRACKETS K94 AND CASEMENT BRACKET F21

24V Solo application KS2 xxx / Version: right (Top-hung - inward opening windows)

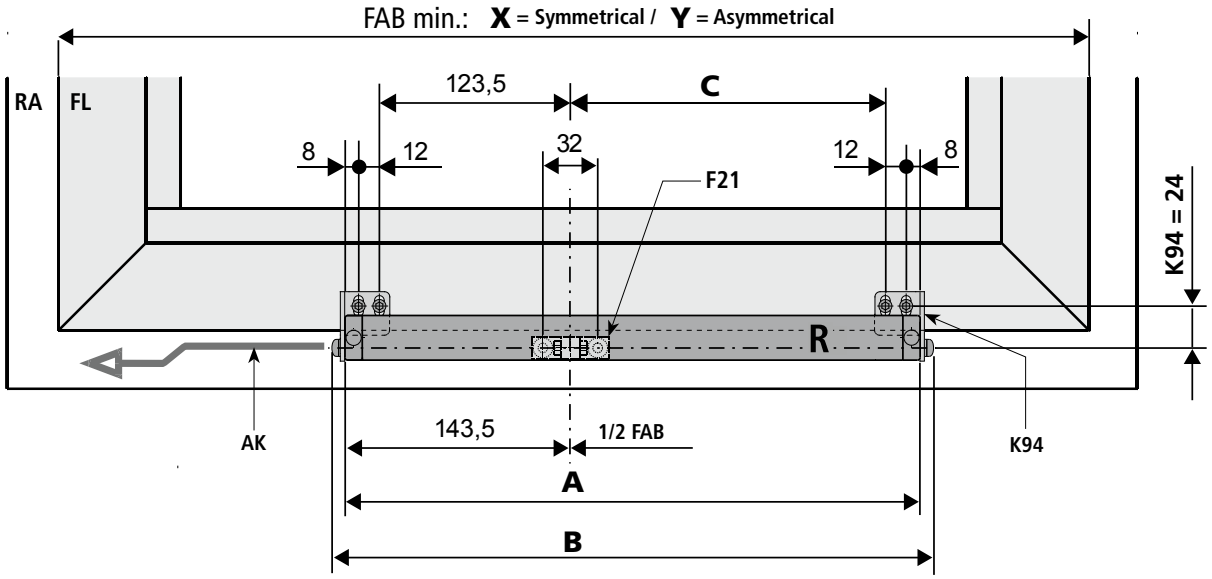

	Stroke 200	Stroke 300	Stroke 400	Stroke 500		
A	336	381	431	546		
B	350	395	445	560		
C	172,5	217,5	267,5	382,5		
X	≥ 380	≥ 470	≥ 570	≥ 800		
Y	≥ 335	≥ 380	≥ 430	≥ 545		

Window versions:
Bottom-hung - inward opening
Top-hung - inward opening
Side-hung - inward opening
Version: left

Version left (L): as right (R), but in mirror image

When mounting two drives (tandem operation), a minimum distance of 50 mm between the drives is considered.

24V Solo application KS2-TWIN xxx (Top-hung - inward opening windows)

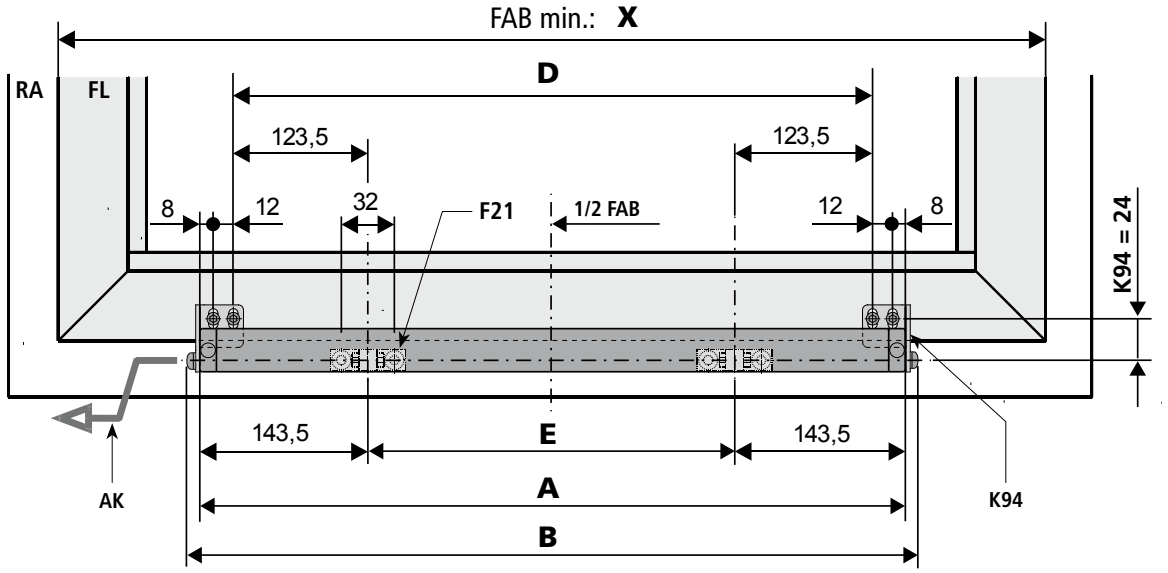

	Stroke 200	Stroke 300	Stroke 400	Stroke 500		
A	641	831	831	1061		
B	655	845	845	1075		
D	601	791	791	1021		
E	354	544	544	774		
X	≥ 640	≥ 830	≥ 830	≥ 1060		

Window versions:
Bottom-hung - inward opening
Top-hung - inward opening
Side-hung - inward opening

230V Solo application KS2 xxx / Version: right (Top-hung - inward opening windows)

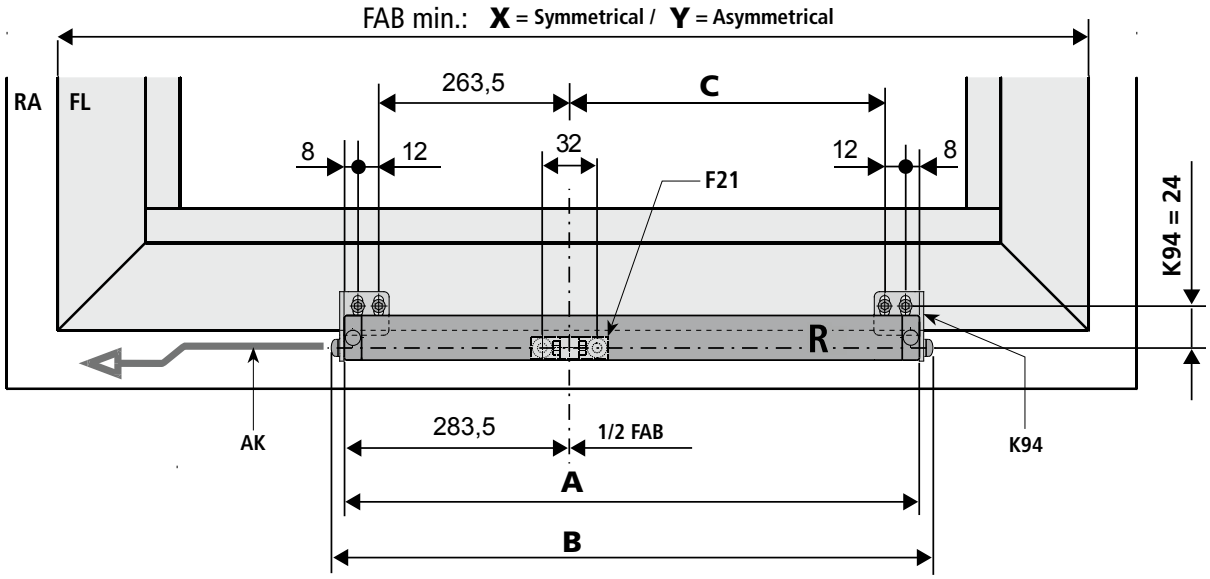

	Stroke 200	Stroke 300	Stroke 400	Stroke 500		
A	476	521	571	686		
B	490	535	585	700		
C	172,5	217,5	267,5	382,5		
X	≥ 570	≥ 570	≥ 570	≥ 800		
Y	≥ 475	≥ 520	≥ 570	≥ 685		

Window versions:

Bottom-hung - inward opening
Top-hung - inward opening
Side-hung - inward opening

Version: left

Version left (L): as right (R), but in mirror image

When mounting two drives (tandem operation), a minimum distance of 50 mm between the drives is considered.

24V 230V Pressure load - Casement assembly (Top-hung - inward opening windows)

Frame bracket: K94
Casement bracket: F21
Drive: fixed

Space on the frame: 16 mm

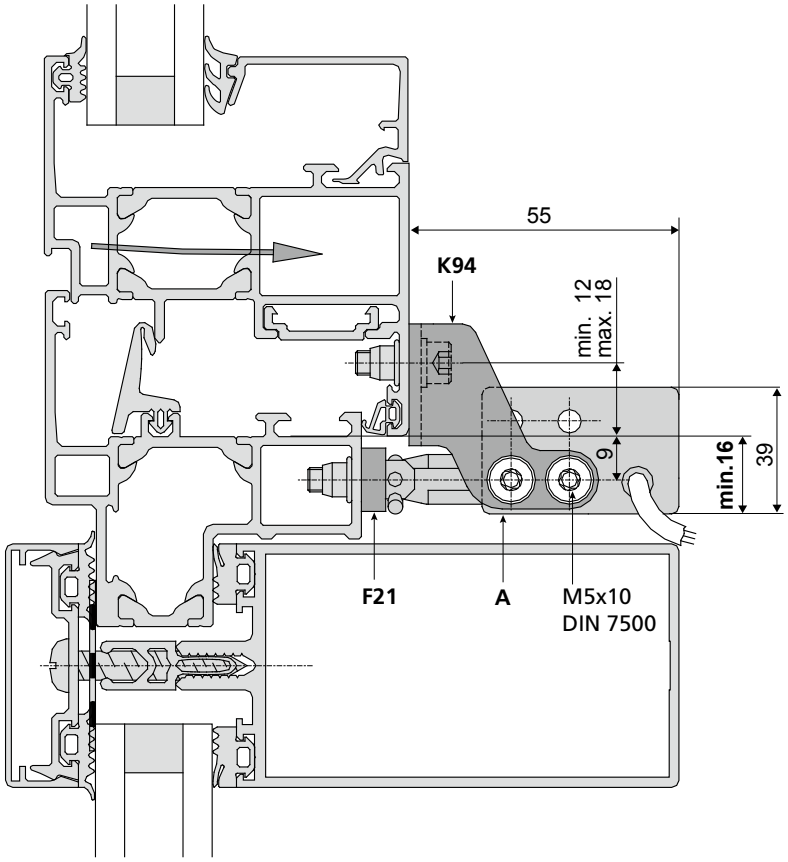

Minimum overall height of casement (FAH)				
Stroke	**200**	**300**	**400**	**500**
Height	350	400	450	600

INSTALLATION STEP 5K: HOLE LAYOUT FOR THE FRAME BRACKETS K93 AND CASEMENT BRACKET F21

24V Solo application KS2 xxx / Version: right (Top-hung - outward opening windows)

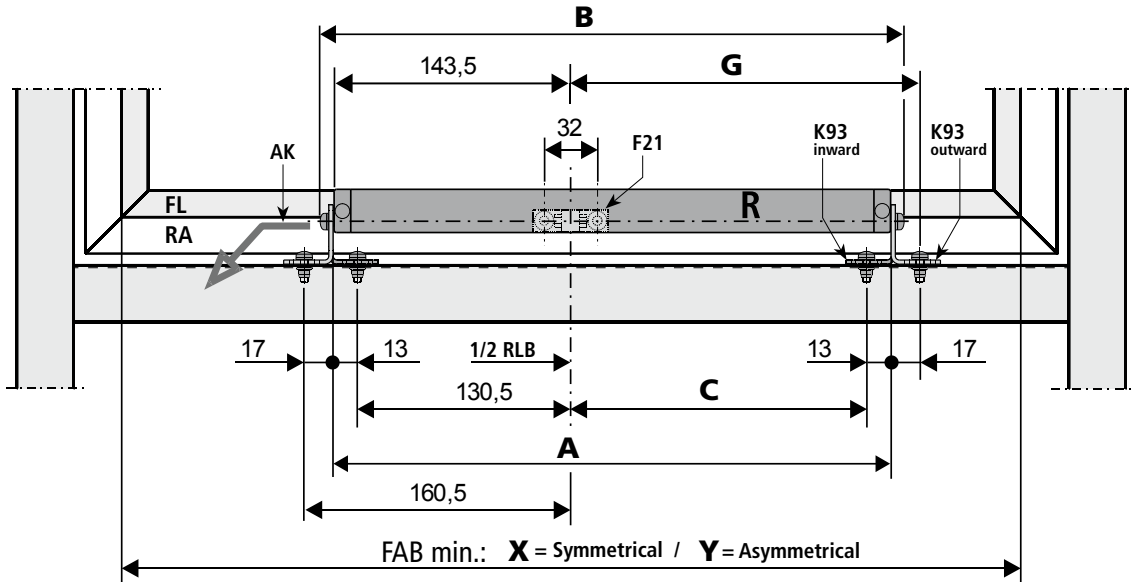

	Frame casement K93 inward			
Stroke	200	300	400	500
A	336	381	431	546
B	350	395	445	560
C	179,5	224,5	274,5	389,5
X	≥ 380	≥ 470	≥ 570	≥ 800
Y	≥ 335	≥ 380	≥ 430	≥ 545

	Frame casement K93 outward			
Stroke	200	300	400	500
A	336	381	431	546
B	350	395	445	560
G	209,5	254,5	304,5	419,5
X	≥ 440	≥ 530	≥ 630	≥ 860
Y	≥ 395	≥ 440	≥ 490	≥ 605

Window versions:

Bottom hung - outward opening
Top hung - outward opening
Projecting top-hung casement
Skyskylight dome
Roof bottom-hung
Roof top-hung
Version: left

Version left (L): as right (R), but in mirror image

When mounting two drives (tandem operation), a minimum distance of 50 mm between the drives is considered.

24V Solo application KS2-TWIN xxx (Top-hung - outward opening windows)

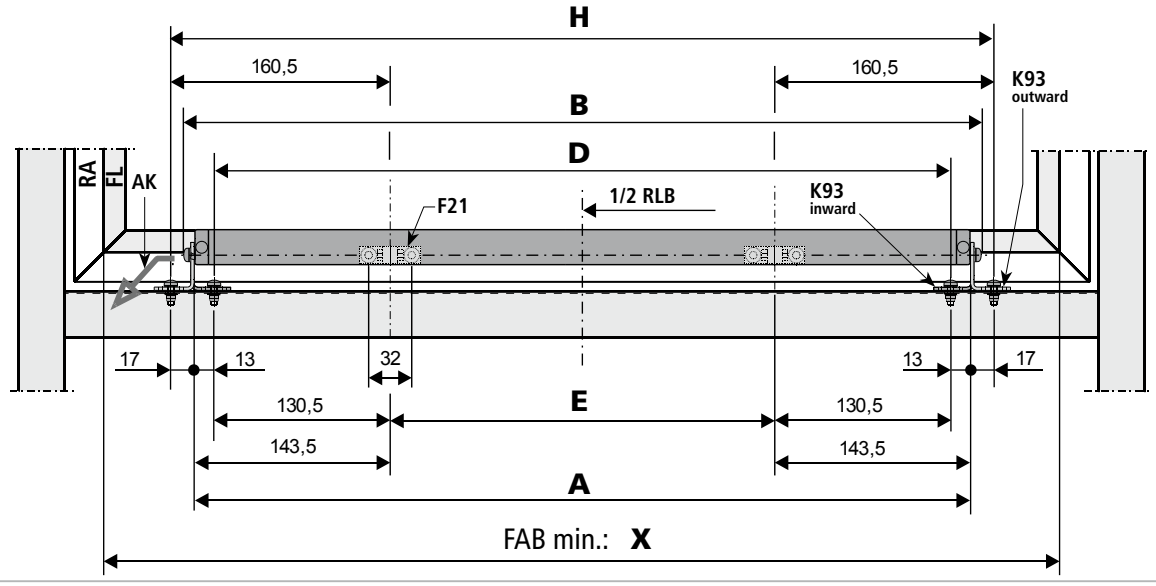

	Frame casement K93 inward		
Stroke	200	400	500
A	641	831	1061
B	655	845	1075
D	615	805	1035
E	354	544	774
X	≥ 640	≥ 830	≥ 1060

	Frame casement K93 outward		
Stroke	200	400	500
A	641	831	1061
B	655	845	1075
E	354	544	774
H	675	865	1095
X	≥ 700	≥ 890	≥ 1120

Window versions:

Bottom hung - outward opening
Top hung - outward opening
Skyskylight dome
Projecting top-hung casement
Roof bottom-hung
Roof top-hung

230V Solo application KS2 xxx / Version: right (Top-hung - outward opening windows)

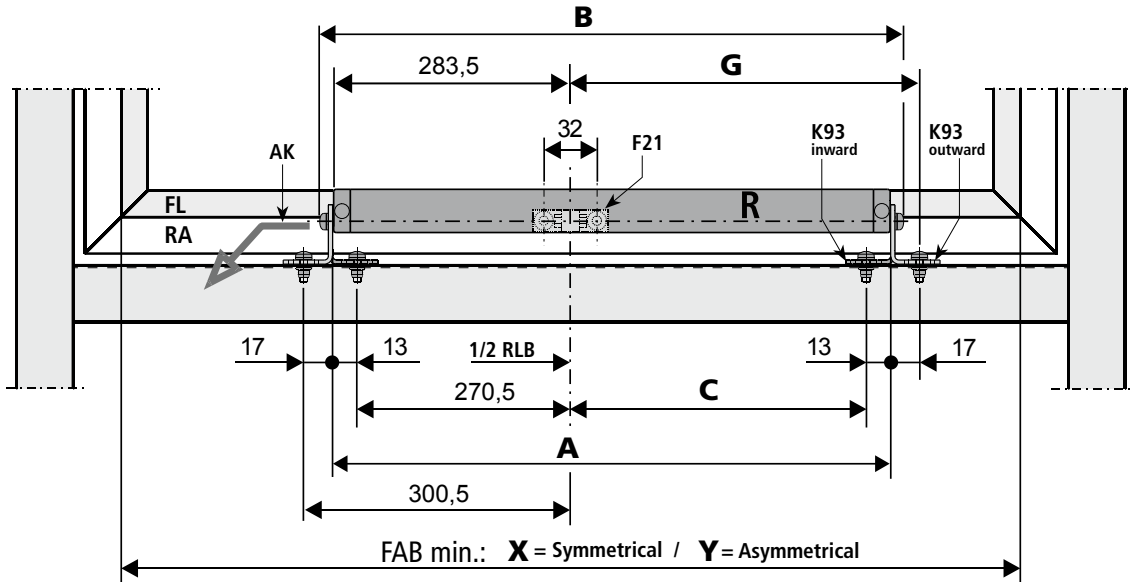

	Frame casement K93 inward			
Stroke	200	300	400	500
A	476	521	571	686
B	490	535	585	700
C	179,5	224,5	274,5	389,5
X	≥ 570	≥ 570	≥ 570	≥ 800
Y	≥ 475	≥ 520	≥ 570	≥ 685

	Frame casement K93 outward			
Stroke	200	300	400	500
A	476	521	571	686
B	490	535	585	700
G	209,5	254,5	304,5	419,5
X	≥ 630	≥ 630	≥ 630	≥ 860
Y	≥ 535	≥ 580	≥ 630	≥ 745

Window versions:

Bottom hung - outward opening
Top hung - outward opening
Projecting top-hung casement
Skyskylight dome
Roof bottom-hung
Roof top-hung
Version: left

Version left (L): as right (R), but in mirror image

When mounting two drives (tandem operation), a minimum distance of 50 mm between the drives is considered.

24V 230V Pressure load - Transom assembly (Top-hung - outward opening windows)

Frame bracket: K93
Casement bracket: F21
Drive: fixed

Space for console with drive: 30 mm

Holes above (strips facing outward)	Holes below (strips facing inward)
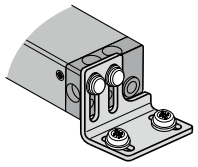	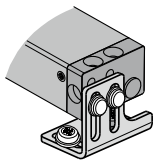

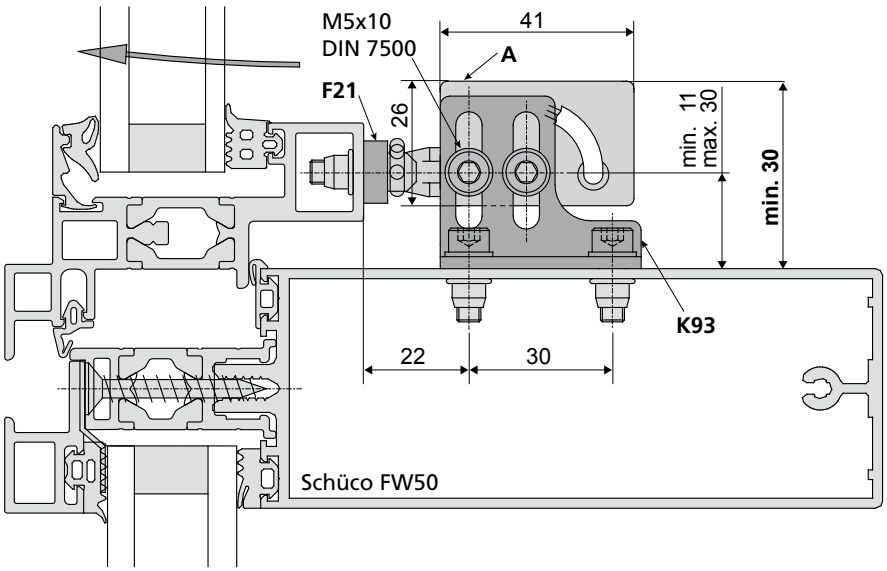

Minimum overall height of casement (FAH)				
Stroke	200	300	400	500
Height	350	400	450	600

INSTALLATION STEP 5L: HOLE LAYOUT FOR THE FRAME BRACKETS K94 / K129 AND CASEMENT BRACKET F21 (DRIVE AT SIDE)

24V

24V **Tandem application KS2 xxx / Combination right / left** **(Bottom-hung - inward opening windows)**

	Window				
Stroke	A	B	C	X	Max. opening
200	336	350	172,5	≥ 380	60°
300	381	395	217,5	≥ 470	60°
400	431	445	267,5	≥ 570	60°
500	546	560	382,5	≥ 800	60°
600	546	560	382,5	≥ 800	60°
800	626	640	462,5	≥ 960	60°

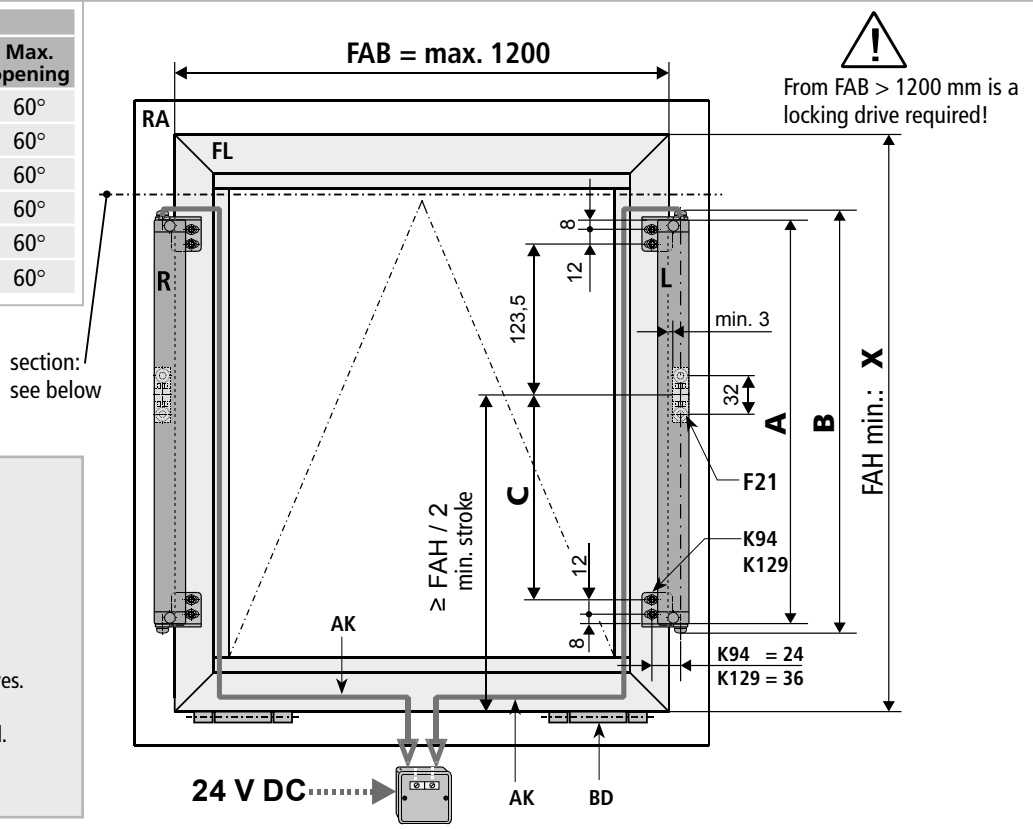

- only for bottom-hung casements (inward opening windows)
- respect max. pulling forces of drives.
- cable exit (power supply) on top.
- rigid-backed side of chain upward.
- white wires must be connected.

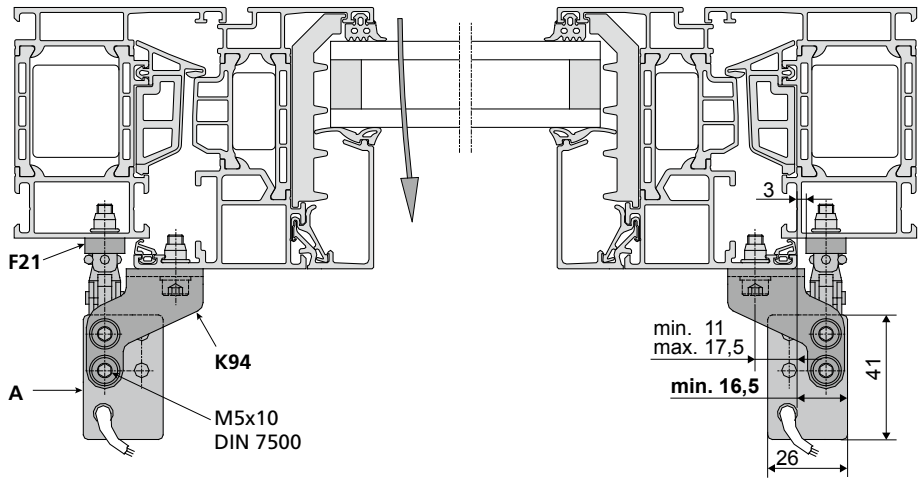

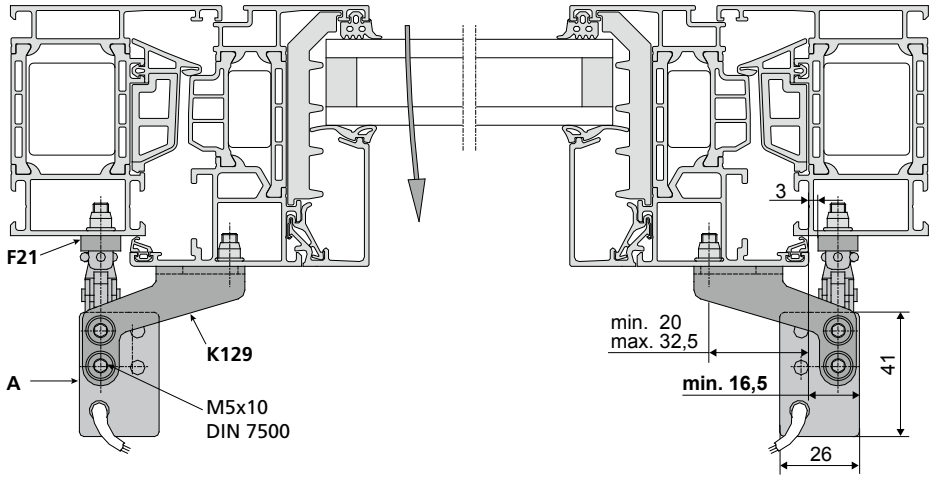

Installation step 5M: Hole layout for the frame brackets F120 / F95 (drive at side)

24V

24V **Tandem application KS2 xxx / Combination right / left** **(Bottom-hung - inward opening windows)**

Stroke	Window A	B	X	Max. opening
200	335	325	≥ 380	45°
300	380	370	≥ 470	50°
400	430	420	≥ 570	60°
500	545	535	≥ 800	60°
600	545	535	≥ 800	60°
800	625	615	≥ 960	60°

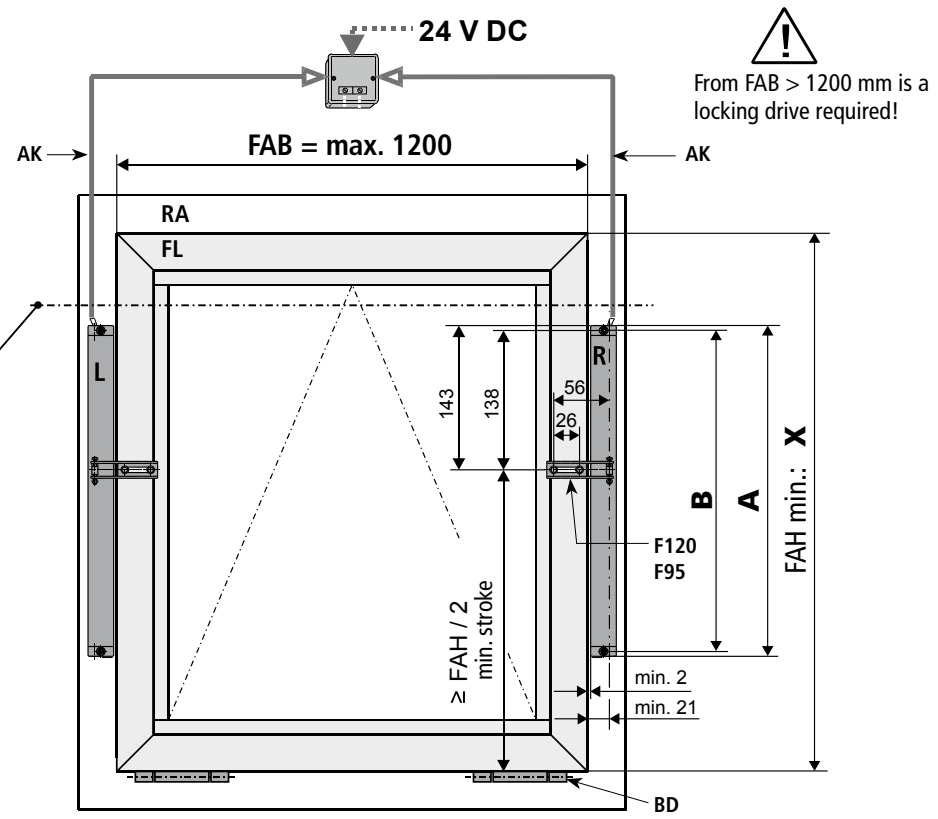

- only for bottom-hung casements (inward opening windows)
- respect max. pulling forces of drives.
- cable exit (power supply) on top.
- rigid-backed side of chain upward.
- white wires must be connected.

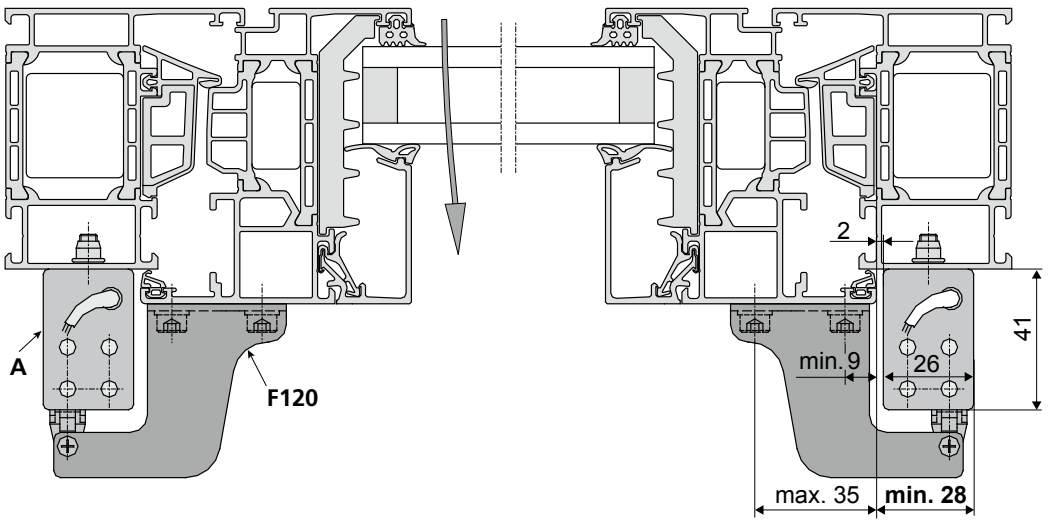

Installation step 6: Assembly casement bracket

24V 230V

- Determine fastenings.
- Produce drill holes with appropriate cross-section. For the mounting dimensions please refer to the above-mentioned hole layout drawings (see chapter „Installation step 3 - 5“) or project-specific documents and drawings).

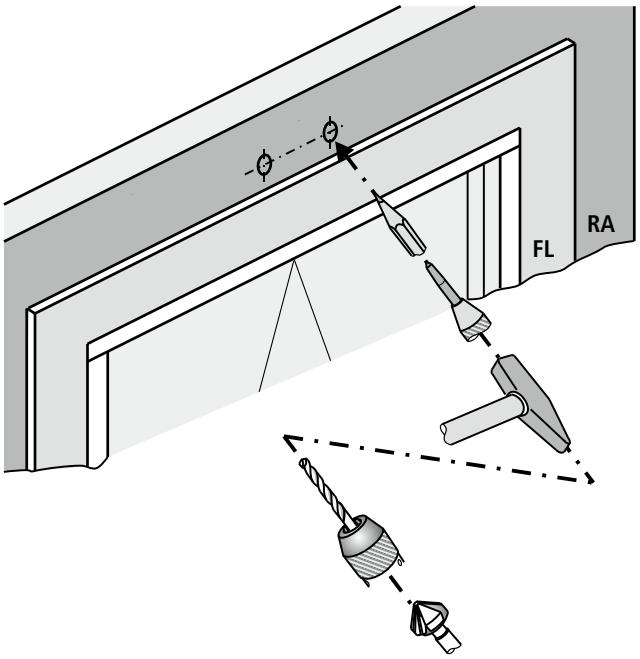

Carefully clear away drilling swarfs to prevent seals from being damaged.
Avoid surface scratches, for example by using masking tape.

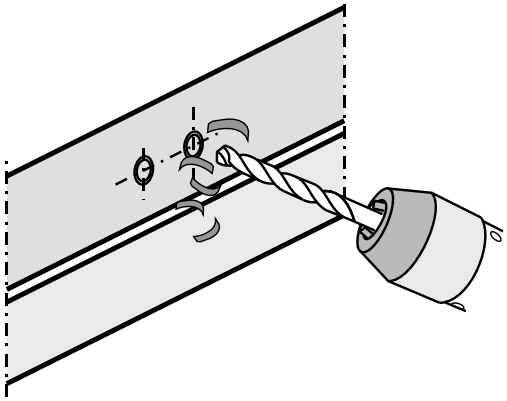

- Fit casement bracket Fxxx.

Make sure it is parallel to casement edge.
„Casement bracket“ center and „chain output“ must be in line.

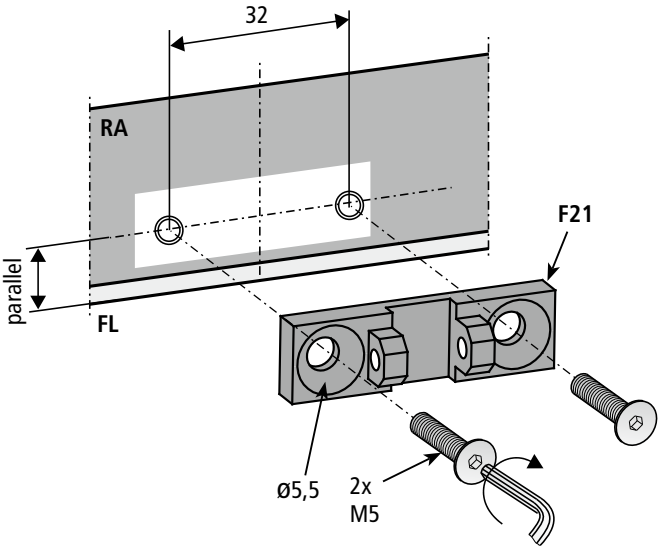

- Secure fasteners against loosening; e.g. by applying removable thread-locking compound such as “Loctite”.

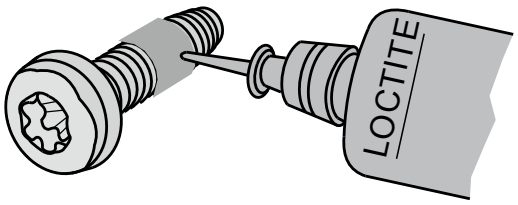

aumüller

24V 230V

Installation step 7a:

Assembly frame bracket - Drive mounted on the window at the top

- Produce drill holes with appropriate cross-section. For the mounting dimensions please refer to the above-mentioned hole layout drawings (see chapter „Installation step 3 - 5") or project-specific documents and drawings).
- Fit frame brackets (Kxxx).

Make sure they are parallel to casement edge.

Note If necessary, use washers. These are depending on the type of screws used.

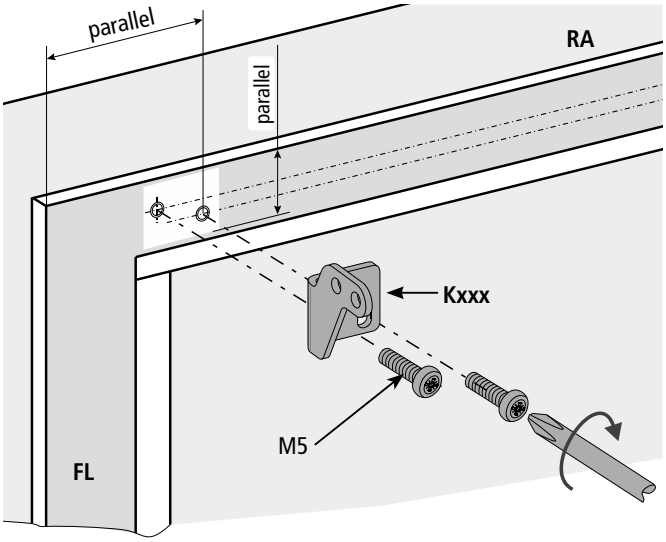

- Attach drive to the frame brackets.
- Insert self-tapping screws M5 ❶ and washers ❷ and tighten.

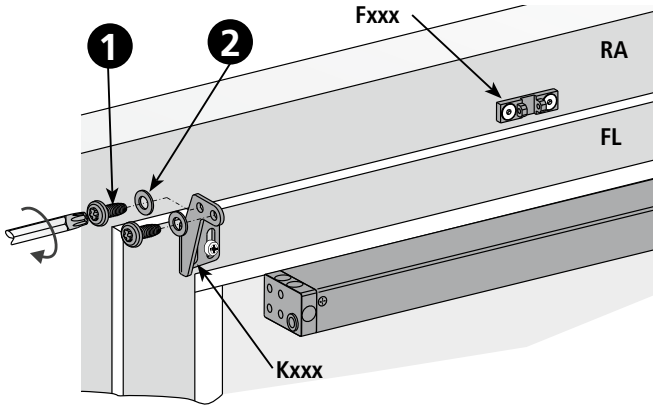

- Connect control voltage (e.g. using a tester) and move out the chain approx. 100 mm.

Note With tandem / triple operation actuate all drives together.

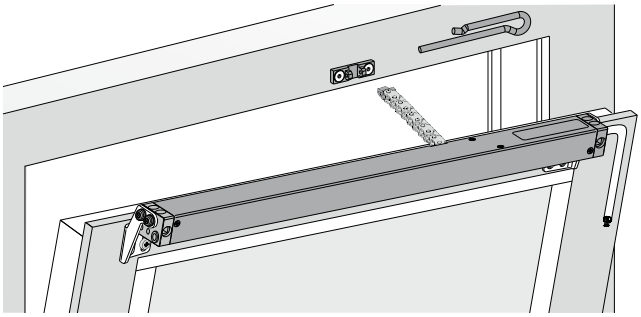

- Secure chain in the casement bracket with spring pin. Insert spring pin from the rigid-backed side of the chain (label side) and snap into place.

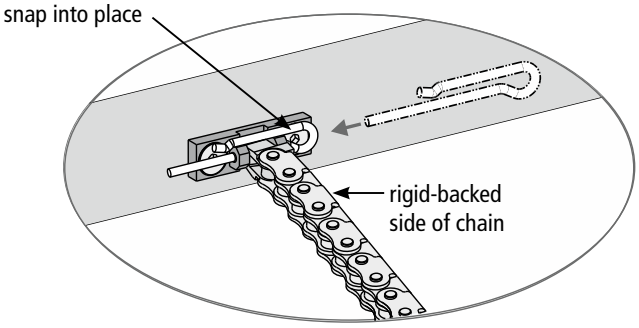

Check swiveling area (see chapter „Safety Check and Performing test run")

Soft run mode S12

Soft run setting for drives with S12

The drive has an electronic position detection. Just before the CLOSED position the chain retracts with reduced speed in the soft run mode, to protect the window and the drive.

- In soft run mode the zero-point - and thus the CLOSE-postion of the window - is recognized.
- The drives with **S12** must turn off in the soft run area (about 40 mm in front of the CLOSE-position).
- With overload and exceeded 40 mm closing, reversing the drive by approximately 10 mm.

S12

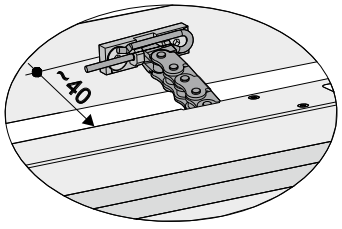

Route cable on or in the casement.

Cable on casement	Cable in glazing bead
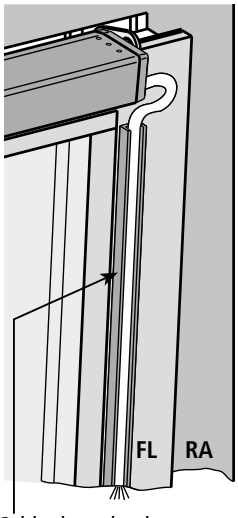	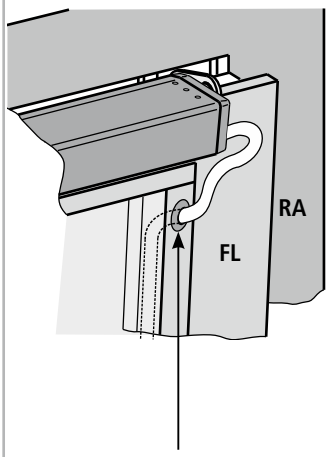
Cable duct glued on (in addition secured with countersunk screws against breaking away).	Drill hole in glazing bead (cable bushing protects against damage to cable).

Connection cable routing on the casement:
- Cable must be protected against damage (shearing-off, kinking, splitting), i.e. by using bushings.

Upon removal of the glazing bead is the danger that the glass may fall.

Cable crossover <u>without</u> protective cable hose	Cable crossover <u>with</u> protective cable hose
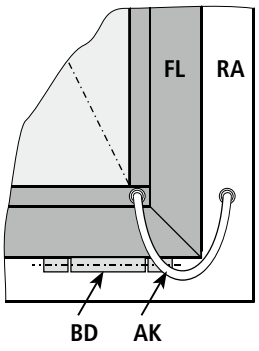	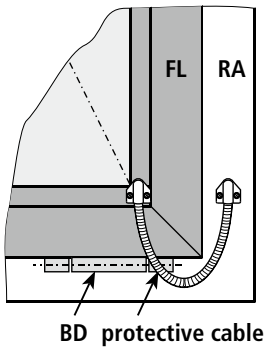

Connection cable routing on the hinge side:
- Make sure that during opening or closing procedure the cable will not be damaged by shearing-off, kinking, crushing.
- Protect cable feedthrough in profile e.g. by using cable bushings, cable transitions.

Installation step 7b: 24V 230V

Fixed assembly with Z-frame bracket

- Produce drill holes with appropriate cross-section. For the mounting dimensions please refer to the above-mentioned hole layout drawings (see chapter „Installation step 3 - 5“) or project-specific documents and drawings).
- Screw drive onto window frame.

Make sure they are parallel to casement edge. The drive body must lie completely flush on the window frame surface.

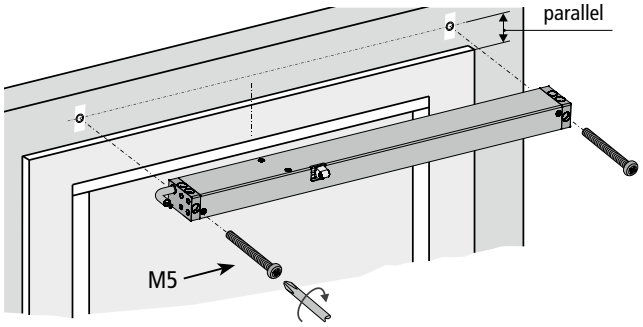

- Screw Z-frame bracket (F95 / F120) onto casement. If necessary, use washers.

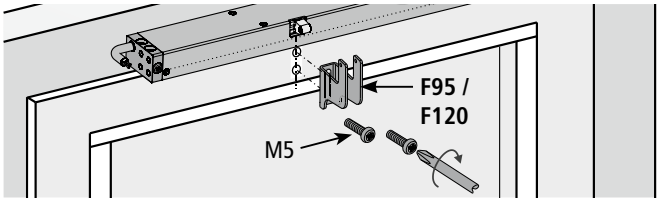

- Connect control voltage (e.g. using a tester) and move out the chain approx. 100 mm.

Note With tandem / triple operation actuate all drives together.

- Secure chain in the casement bracket:
  - with screw and nut or
  - with spring pin. Insert spring pin from the rigid-backed side of the chain (label side) and snap into place.

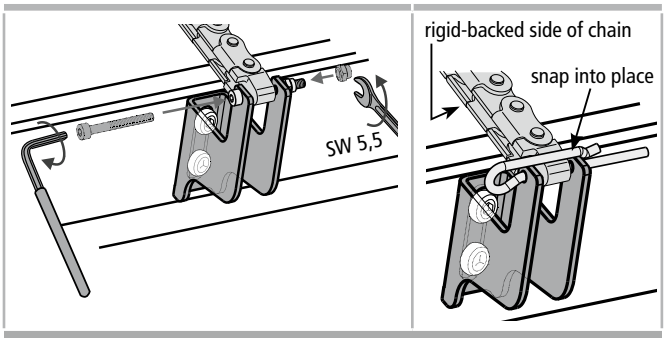

Note the soft run mode at drives with **S12** (see chapter „Installation step 7a“).

Check swiveling area (see chapter „Safety Check and Performing test run“)

aumüller

24V 230V

Installation step 7c:

Assembly frame bracket - Drive mounted on the window at the Bottom

- Produce drill holes with appropriate cross-section. For the mounting dimensions please refer to the above-mentioned hole layout drawings (see chapter „Installation step 3 - 5“) or project-specific documents and drawings).
- Fit frame brackets (Kxxx).

Make sure they are parallel to casement edge.

Note If necessary, use washers. These are depending on the type of screws used.

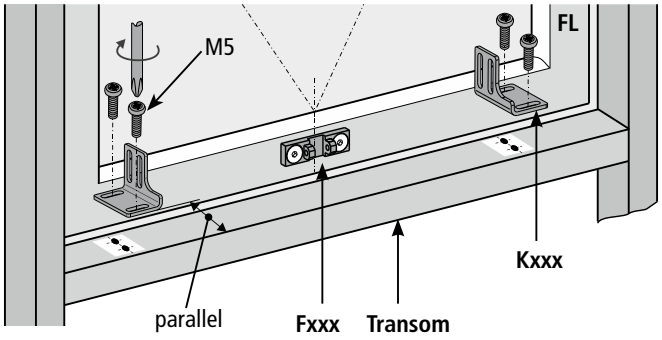

Holes above (strips facing outward)	Holes below (strips facing inward)
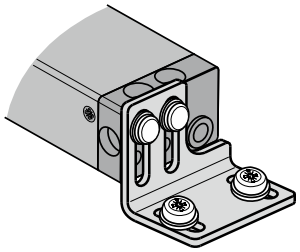	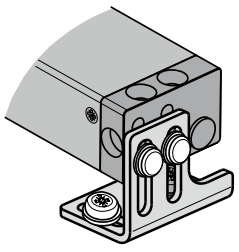

- Attach drive to the frame brackets.
- Insert self-tapping screws M5 ❶ and washers ❷ and tighten.

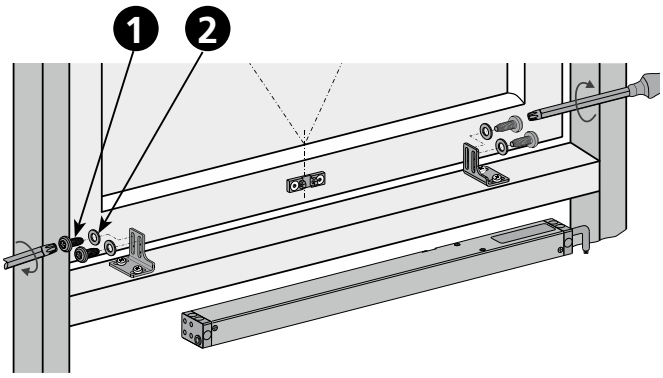

- Connect control voltage (e.g. using a tester) and move out the chain approx. 100 mm.

Note With tandem / triple operation actuate all drives together.

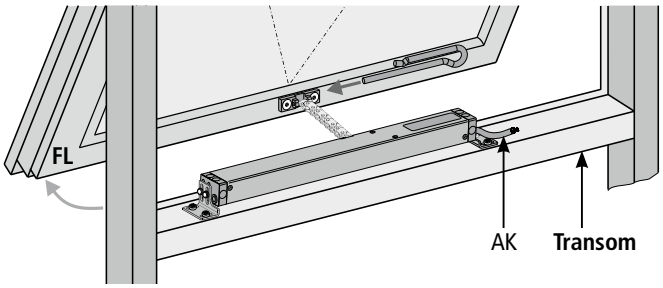

- Secure chain in the casement bracket with spring pin. Insert spring pin from the rigid-backed side of the chain (label side) and snap into place.

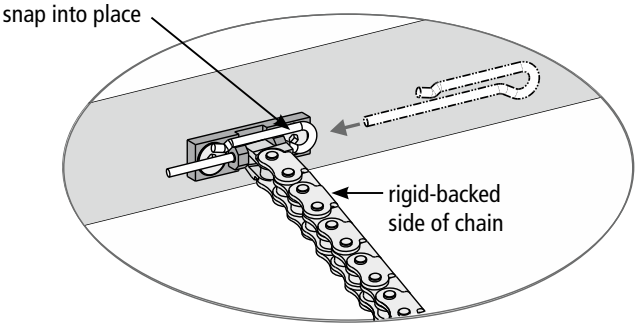

Note Note the soft run mode at drives with **S12** (see chapter „Installation step 7a“).

- Route cable on the frame or mullion/transom. Cable must be protected against damage (shearing-off, kinking, splitting).

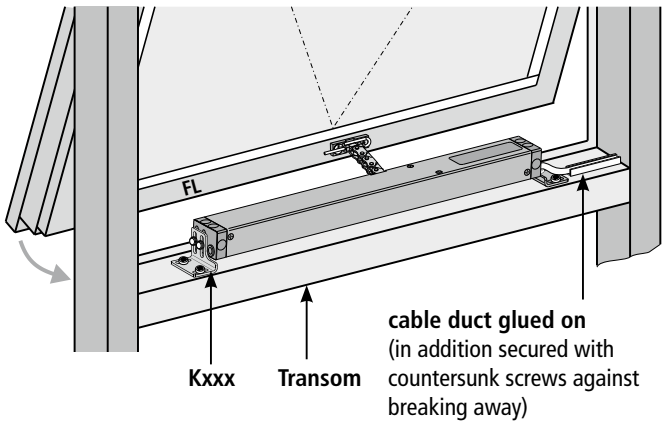

Check swiveling area (see chapter „Safety Check and Performing test run“)

INSTALLATION STEP 8A: CONCEALING THE DRIVE

24V **230V**

Cover profile set AP KS2

Part.-No.:	**523952 L = 1,5 m, incl. 2x profile bracket (*)** **523954 L = 2,0 m, incl. 3x profile bracket (*)** **523956 L = 2,9 m, incl. 4x profile bracket (*)**
Application:	Cover profile for surface mounted drives KS2 with brackets **K94**, **K129**, **K130**. Profile length adjustable to the lenght of the drives (end caps recommended) or of the casement (without end caps).
Material:	see detailled description of componets
Equipment:	inclusive profile brackets, without end caps.

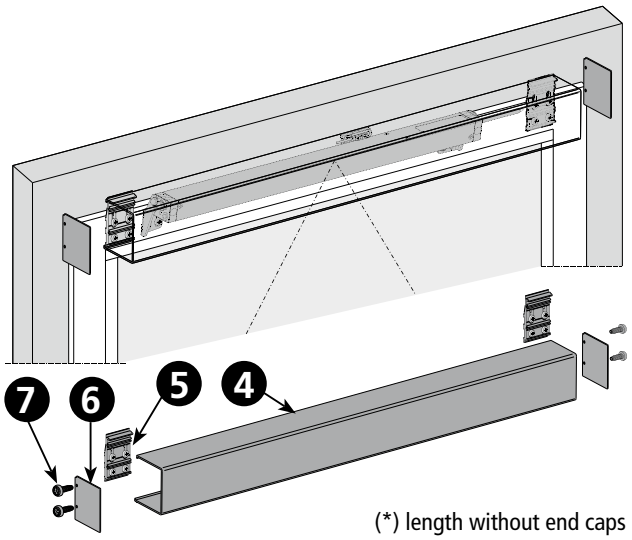

(*) length without end caps

Cover profile

Part.-No.:	**523951**
Application:	Cover profile for drives KS2 for cutting on site.
Material / Finish:	aluminium (natural anodized)
Equipment:	without profile brackets, without end caps

4

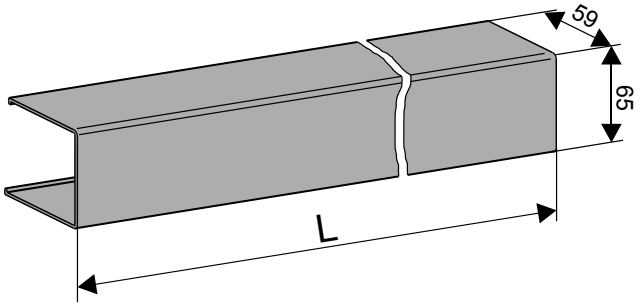

Profile bracket

Part.-No.:	**523948**
Application:	Profile bracket for KS2 cover profile < 2 m lenght: 2 pieces > 2 m lenght: 3 – 4 pieces
Material / Finish:	aluminium (natural anodized)
Equipment:	1 piece (for fixing the cover profile)

5

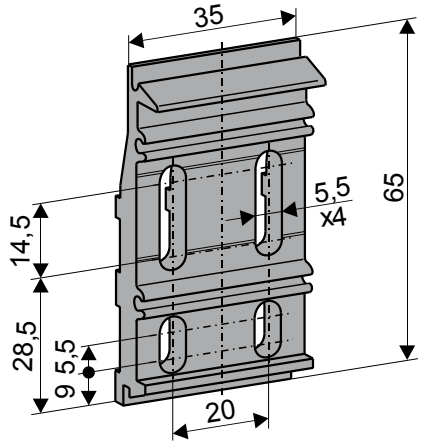

End caps

Part.-No.:	**523950**
Application:	End caps for KS2 cover profile.
Material / Finish:	aluminium (natural anodized)
Equipment:	2 end caps 4x screw M3x12 (Taptite)

6 7

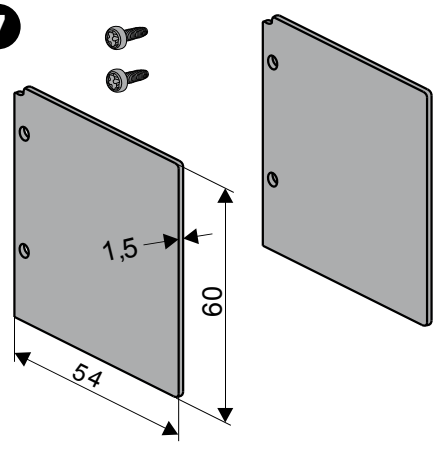

Application examples

24V 230V

Application examples on windows

Bottom-hung inward opening
Casement assembly

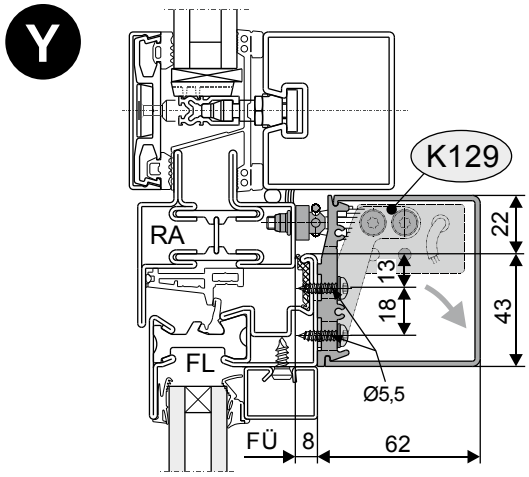

Detail of mounting on steel window

Bottom-hung inward opening
Casement assembly

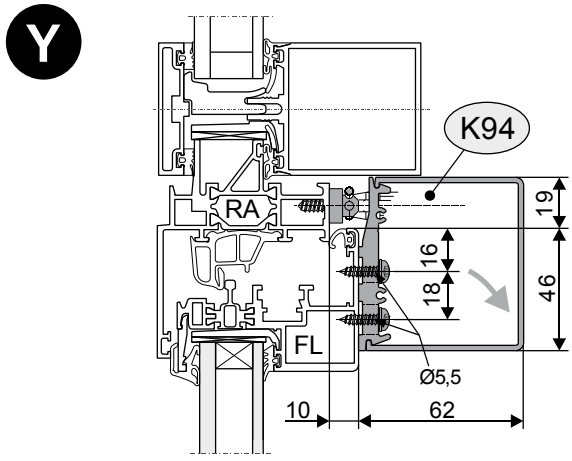

Detail of mounting on aluminium window

Bottom-hung inward opening
Casement assembly

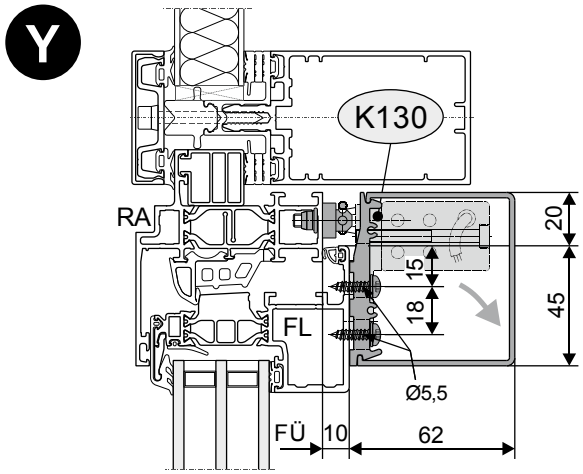

Detail of mounting on aluminium window

Top-hung outward opening
Frame assembly

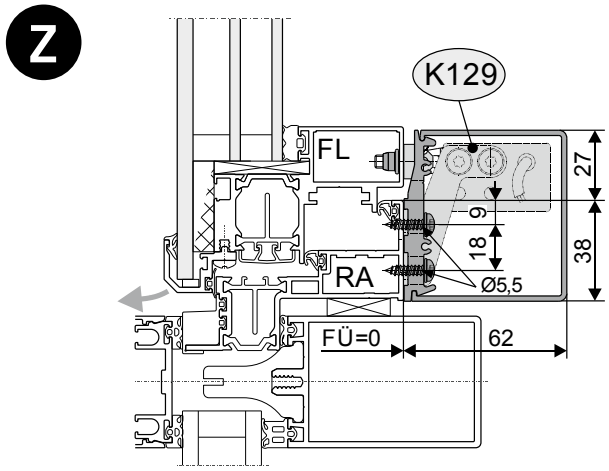

Detail of mounting on aluminium window

Top-hung outward opening
Frame assembly

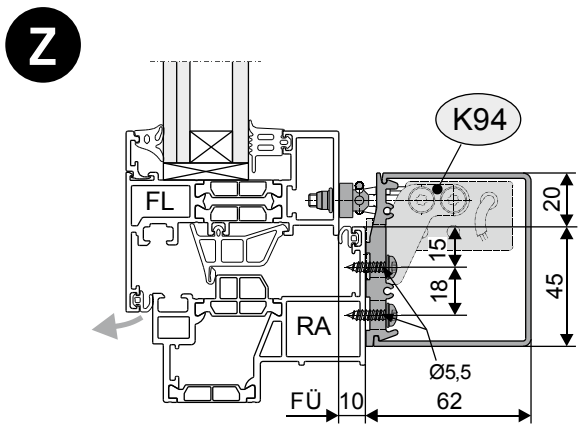

Detail of mounting on aluminium window

Top-hung outward opening
Frame assembly

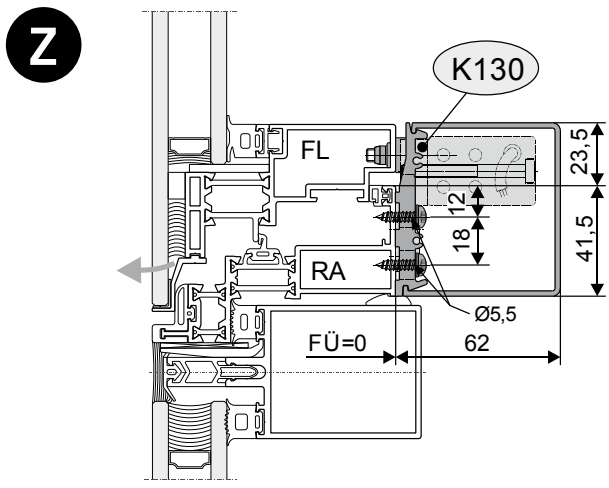

Detail of mounting on aluminium window

CUT LENGTH AND HOLE LAYOUT

24V 230V

Cut length and hole layout

(BOTTOM-HUNG - INWARD OPENING WINDOWS / CASEMENT ASSEMBLY)

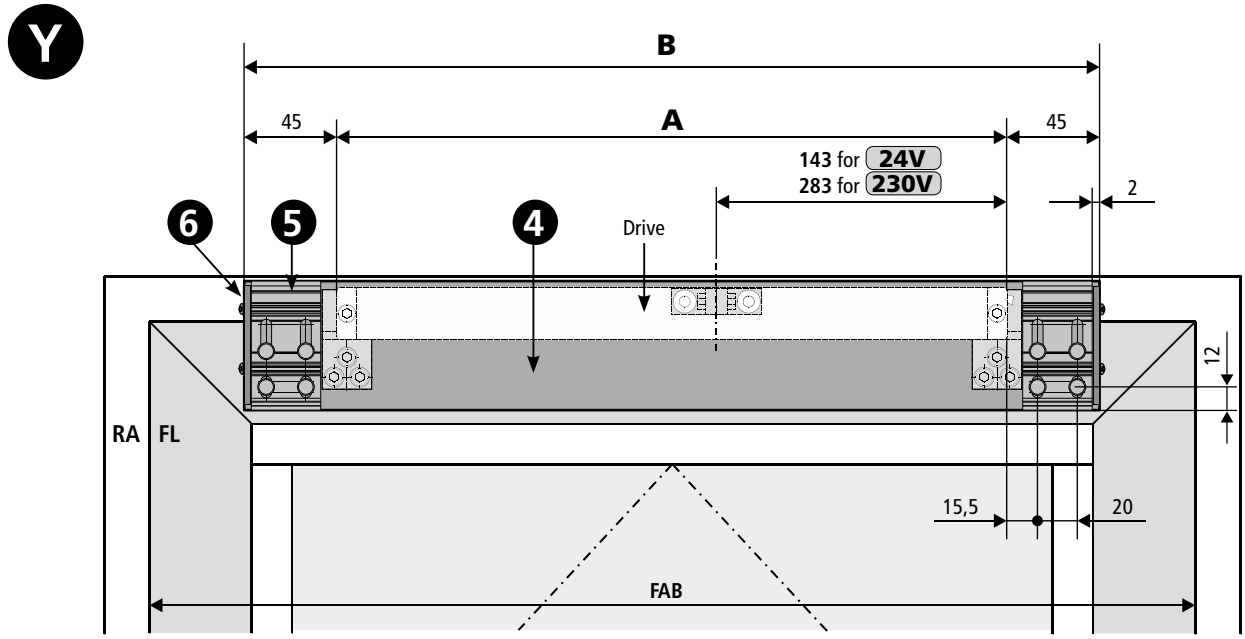

24V						
Stroke	200	300	400	500	600	800
A	335	380	430	545	545	625
B	425	470	520	635	635	715

230V						
Stroke	200	300	400	500	600	800
A	475	520	570	685	685	765
B	565	610	660	775	775	855

Cut length and hole layout

FRICTION HINGED WINDOWS / TOP HUNG - OUTWARD OPENING WINDOWS / FRAME ASSEMBLY

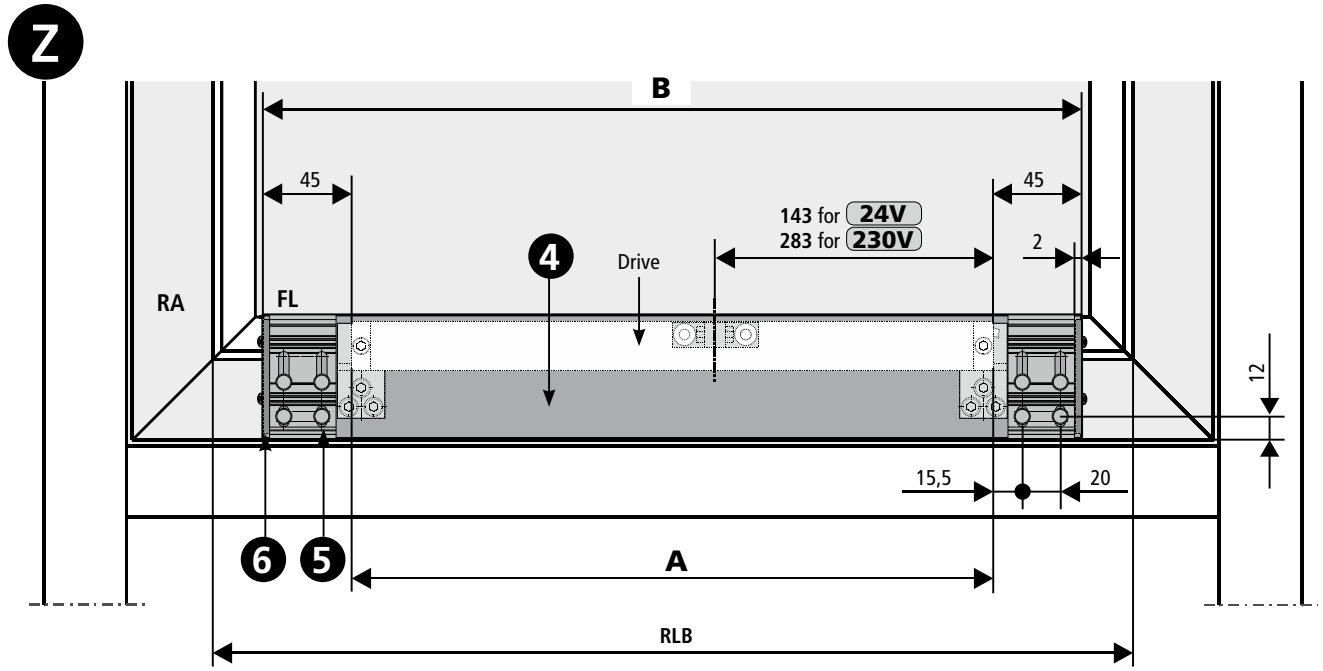

24V						
Stroke	200	300	400	500	600	800
A	335	380	430	545	545	625
B	425	470	520	635	635	715

230V						
Stroke	200	300	400	500	600	800
A	475	520	570	685	685	765
B	565	610	660	775	775	855

HOLE LAYOUT

24V 230V

Cut length and hole layout — FRICTION HINGED WINDOWS / TOP HUNG - OUTWARD OPENING WINDOWS / CASEMENT ASSEMBLY

Z

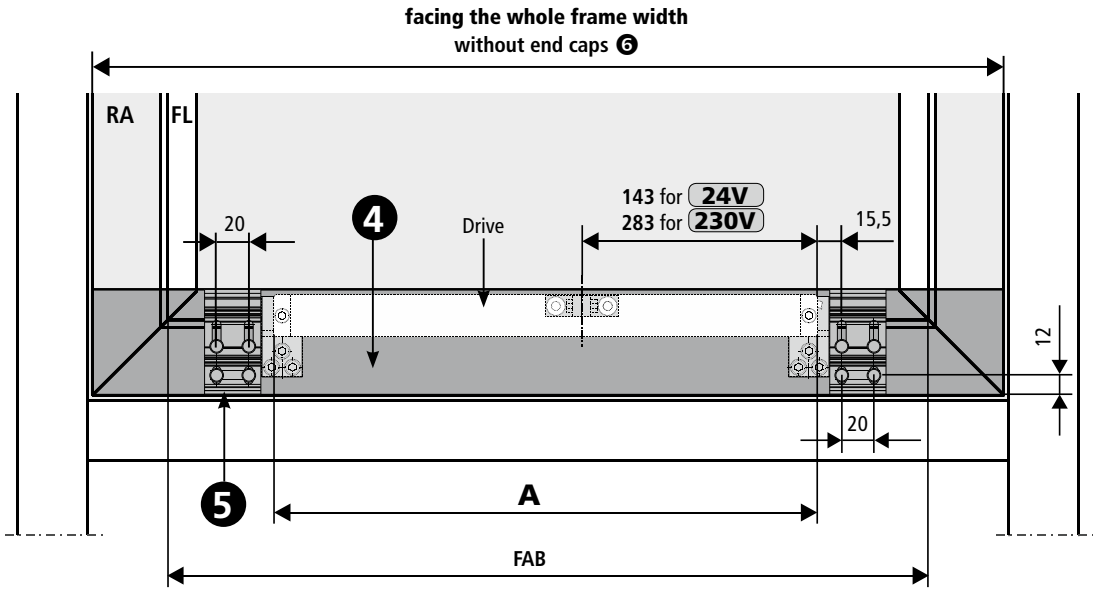

24V						
Stroke	200	300	400	500	600	800
A	335	380	430	545	545	625

230V						
Stroke	200	300	400	500	600	800
A	475	520	570	685	685	765

Cut length and hole layout — FRICTION HINGED WINDOWS / TOP HUNG - OUTWARD OPENING WINDOWS / FRAME ASSEMBLY

Z

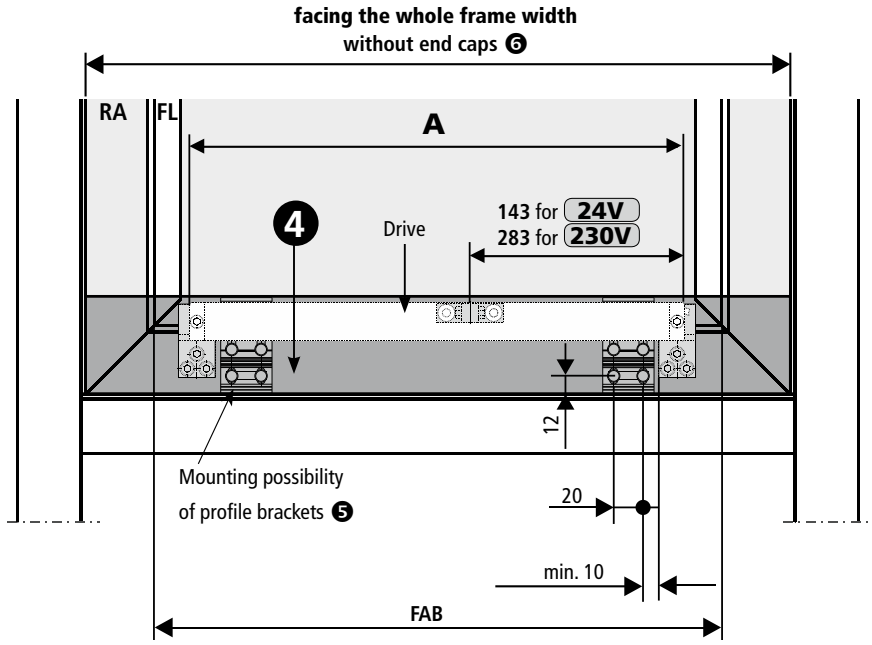

24V						
Stroke	200	300	400	500	600	800
A	335	380	430	545	545	625

230V						
Stroke	200	300	400	500	600	800
A	475	520	570	685	685	765

INSTALLATION STEP 8B: Installing the cover profile

24V 230V

- Determine fastenings.
- Produce drill holes with appropriate cross-section. For the mounting dimensions please refer to the above-mentioned hole layout drawings (see chapter „INSTALLATION STEPE 8A).

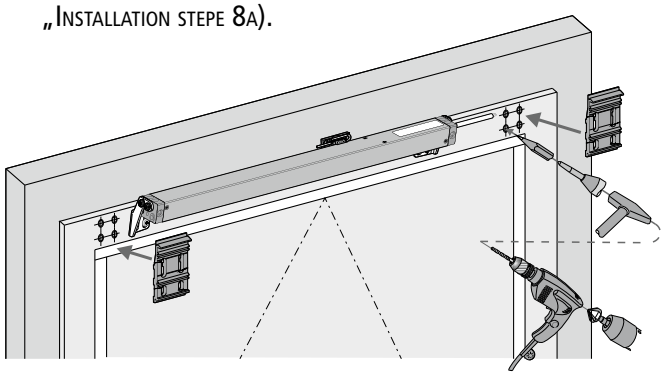

Carefully clear away drilling swarfs to prevent seals from being damaged.
Avoid surface scratches, for example by using masking tape.

- Screw on profile brackets ❺.
  Number of profile brackets ❺ depends on the length of the cover profile ❹: < 2 m length = 2 pieces
  > 2 m length = 3 - 4 pieces

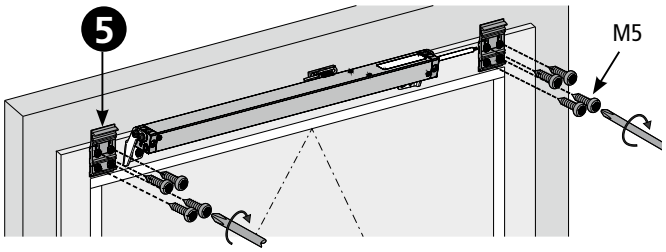

- Determine length of cover profile ❹:
  Length cover profile ❹ = total distance between the profile brackets ❺ (outer edge) + 4 mm.
- Use a saw to shorten the cover profile ❹ to the required length.
- Deburr saw cut edge.

Ensure that you saw the profile perpendicular.

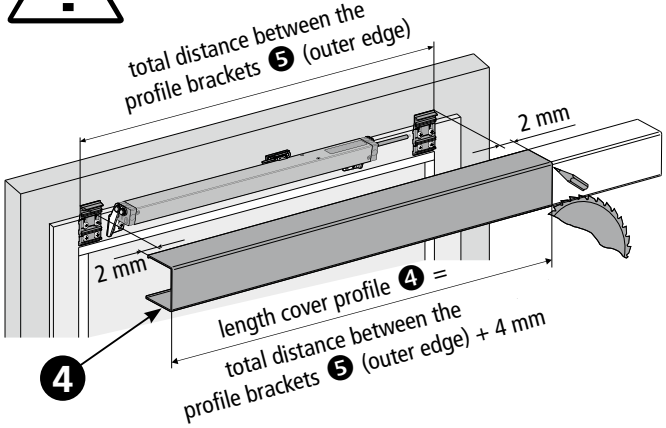

- Align the cover profile ❹ on the profile brackets ❺ proportionally and centrally and fit.

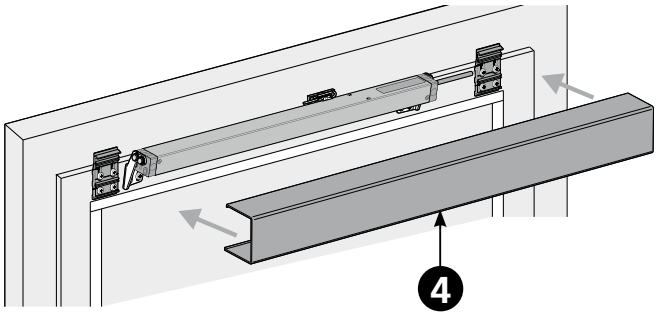

NOTE Ensure the correct positioning of the cover profile ❹ (short side facing upwards).

Top hung / projecting top-hung casement - outward opening	Bottom-hung casement inward opening
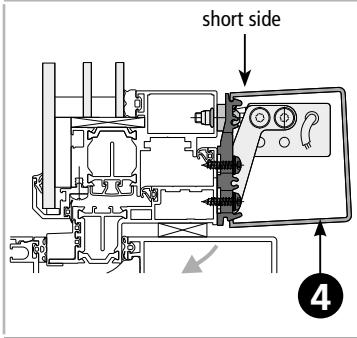	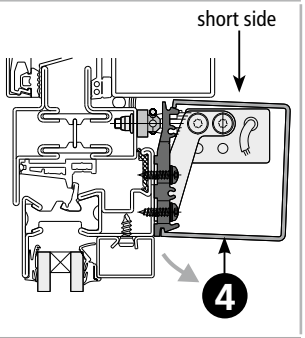

- Attach end caps ❻ and with screw M3 ❼ fasten.

NOTE Open casement electrically if appropriate (to have a better access to the screws ❼).

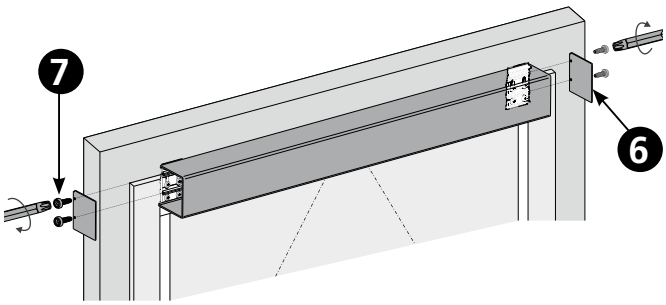

The end cap ❻ it exactly into the cover profile ❹ uand form a flush edge. In the case of covers between post and post end caps ❻ are not required.

aumüller

INSTALLATION STEP 9: ELECTRIC CONNETCTION

24V **230V**

Make sure when establishing the connection that there is no voltage at the terminals!
Unused wires must be safely insulated!

The running direction of the 24V-drive may be changed by interchanging (polarity reversal) the wires **„BN – (brown)"** - **„BU – (blue)"**.

Wire colour coding	
Colour	**DIN IEC 757**
black	BK
white	WH
brown	BN
blue	BU
green / yellow	GN / YE
green	GN
violet	VT
grey	GY

Direction of travel

OPEN ↑

CLOSE ↓

polarity reversal

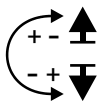

Connection assignment 24V

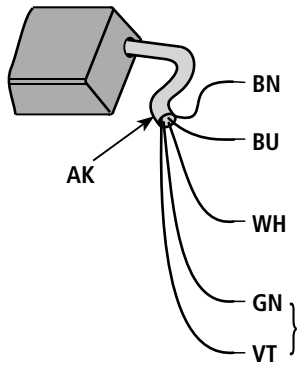

	↑	↓
BN	+	-
BU	-	+

WH is used for communication, with synchronized multi-drive operation

Version Z:
contact max. 24 V, 500 mA (min. 10mA)

Connection assignment 230V

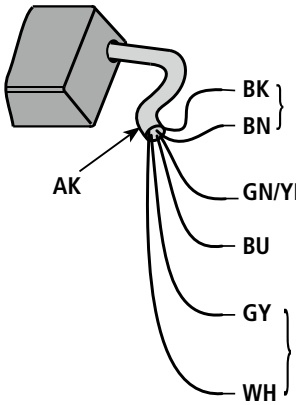

	↑	↓
	Open	Close
L	BN	BK

WH + GY for Version Z: (optional)
contakt max. 24V, 500 mA (min. 10mA)

Multi-drive operation with master and slave 24V

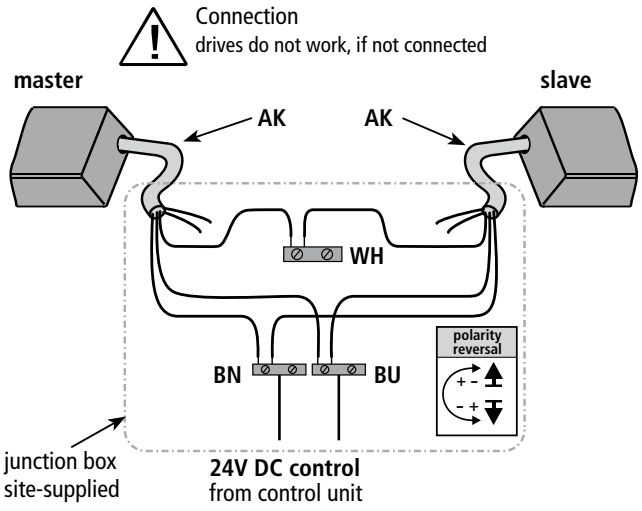

WH is used for communication, with synchronized multi-drive operation.

Optional: 1 to 4 drives (at KS2 Twin 1 or 2 drives) and max. 2 locking drives are possible.

Multi-drive operation with master and slave Set 230V / 24V

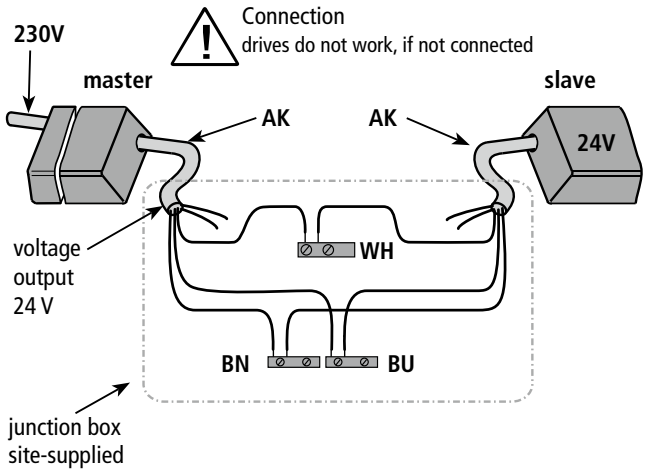

WH is used for communication, with synchronized multi-drive operation.

Optional: 1 to 4 drives (at KS2 Twin 1 or 2 drives) and max. 2 locking drives are possible.

ELECTRIC CONNETCTION

24V 230V

Multi-drive operation with M-COM — 24V

Connection
no synchronous running , if not connected

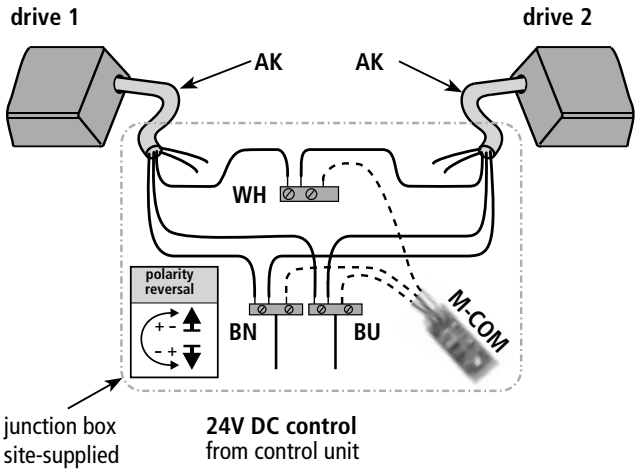

WH is used for communication,
with synchronized multi-drive operation.

Optional: 1 to 4 drives (at KS2 Twin 1 or 2 drives) and max. 2 locking drives are possible.

Cable junction box (for renewal) — 24V

Order number:	**513344**
Application:	to extend a drive cable
Rated voltage:	only for low voltage to max. 50V DC/AC
Material:	stainless steel (V2A)
Protection class:	IP 40
Dimensions:	25 x 27 x 150 mm
Equipment:	with cable gland (grey) including strain relief, with loose ceramic terminals.

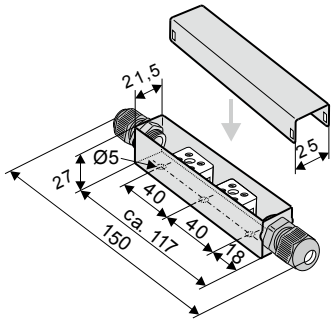

M-COM (Main control unit) — 24V

Order number:	**524177**
Application:	Configuration module for the automatic configuration and monitoring of max. 4 opening / 2 locking drives type S12 / S3 in multi-drive systems.
Rated voltage:	24V DC +/- 20%, (max. 2 Vss)
Current consumption:	<12 mA
Drive type:	S12
Protection class:	IP30 rubber jacket
Ambient temperature:	0 °C ... + 70 °C
Dimensions:	45 x 17 x 6 mm
Connecting wires:	3 wires 0,5 mm² x 50 mm

Feature / Equipment:
printed circuit board with connecting wires for integration in site-supplied junction box.

UniPC with configuration interface — 24V 230V

Order number:	**524178**
Application:	Hard- and software for configuration of drives supplied by Aumüller Aumatic GmbH
Rated voltage.	24V DC +/-20%
Parameterizable drives:	24V DC type MP, S3, S12, S12 V.2 230V AC type S12, S12 V.2
Scope of delivery:	software UniPC (Downloadlink*), Interface "ParInt", USB cable, connection cable * http://www.aumueller-gmbh.de/Downloads

Features / Equipment:
Power supply 24V DC is not included in the scope of delivery!
Any extended settings require a software licence.

Any reconfiguration of a drive is entirely at the user's own risk and responsibility.

ELECTRICAL CONNECTION CONFIGURED WITH M-COM

Individual expansion: Multi-drive operation with M-COM and locking drive

24V

Individual expansion

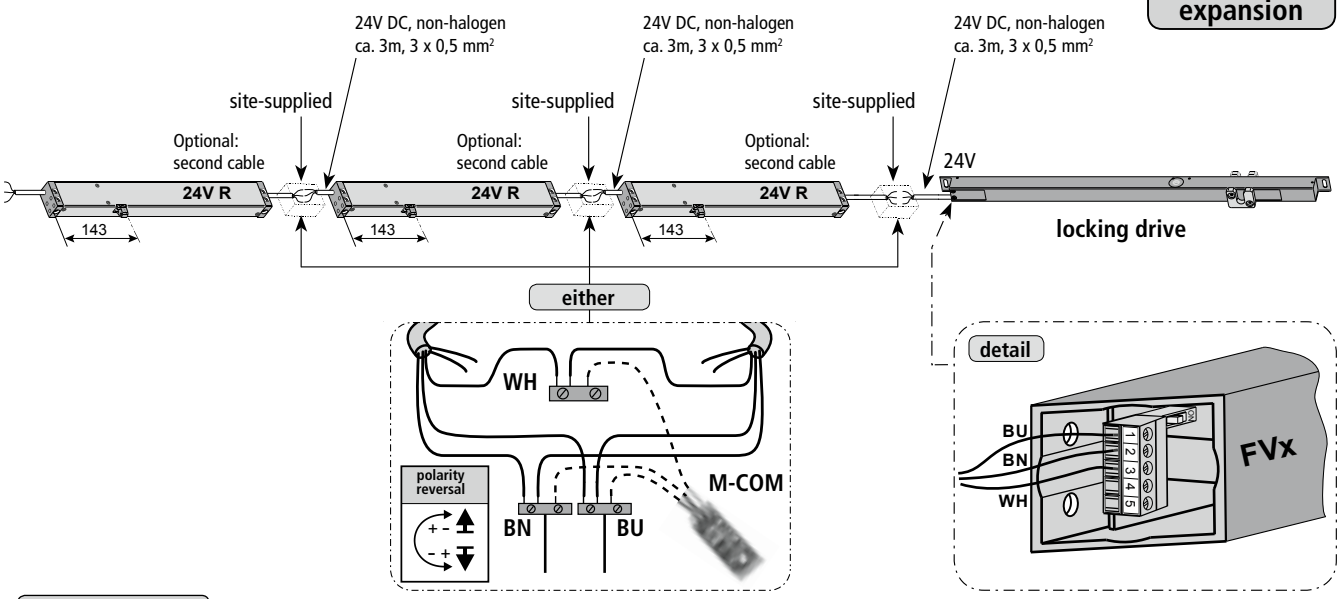

NOTE

A maximum of **three single-drive** and **one locking drive** are possible.
Optional: Second drive-cable.
Configuration is done by **M-COM**.

BN =	brown
BU =	blue
WH =	white

Multi-drive operation: Drive „Set A" with M-COM and locking drive

230V/24V

Drive: Set A

NOTE

Drive „Set A" factory-configured set.
includes:
Master: KS2 S12 230V AC R with voltage output 24V DC
Slave: KS2 S12 24V DC R with conection cable on the motor side

OPTIONS:
Programmable special functions and sequence control with locking drives.
Configuration is done by **M-COM**.

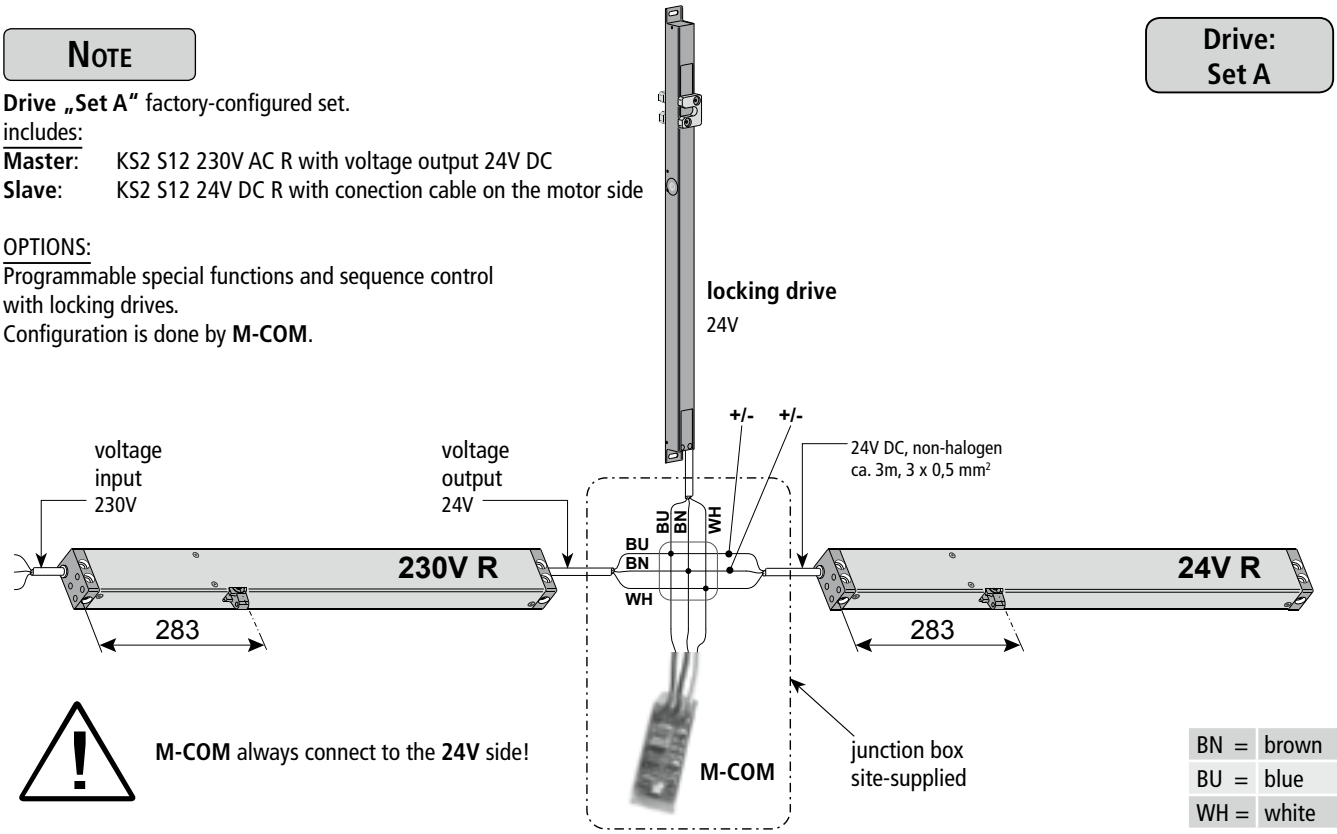

M-COM always connect to the **24V** side!

BN =	brown
BU =	blue
WH =	white

INSTALLATION STEP 10:
SUPPLY LINES OF CONTROL UNIT TO THE DRIVES

Observe current regulations and guidelines e.g. DIN 4102-12 regarding the "Fire behavior of building materials-circuit integrity maintenance of electric cable systems" (E30, E60, E90) and the "Specimen Guideline on Conduits German designation - MLAR", and also prescribed constructional regulations!

RECOMMENDATION For safety reasons a cable of the next higher wire cross section should be selected.

Formula to calculate
the required wire cross-section of a supply line

24V

$$A\ mm^2 = \frac{I_{A\ (total)} * L_{m\ (length\ supply\ line)} * 2}{2{,}0\ V_{(voltage\ drop)} * 56\ m / (\Omega * mm^2)}$$

Calculation example

Available data:
- cut-off current per drive (i. e. 2 x 4.0A) from data sheet
- length to be bridged from the last window to the control unit (i. e. 10 meters)

$$A = \frac{(2 * 4{,}0A) * 10m * 2}{2{,}0V * 56m / (\Omega * mm^2)}$$

A = 1,42mm² -> **1,5mm²** chosen

Laying and connecting the drive cable

- Avoid extreme temperature differences in the installation area (danger of condensation).
- Set clamping point close to window and ensure accessibility.
- Ensure expansion possibilities of the drive and the drive cable.
- Consider the cable length and the cross sections of the drives supply lines.

INSTALLATION STEP 11:
SAFETY CHECK AND TEST RUN

Check the mounted system for its safety; perform test run and commissioning.

Safety test:
- Connect operating voltage.
- Check fastening (frame brackets, casement brackets) for firm fit or tightening.

Test run:
- Visual inspection of casement movements.
- Stop immediately by malfunction!
- Pay attention to collision with facade construction and correct installation, if required.

Risk evaluation:

Before operating a power-operated window to which window drives were mounted, which were sold by the manufacturer as incomplete machines according to installation declaration, the possible risk to ahazard of persons must be determined, evaluated and minimized by taking appropriate technical measures in accordance with the Machinery Directive. Separate documents for performing a risk assessment can be downloaded from the homepage of

Firm AUMÜLLER AUMATIC GmbH
(**www.aumueller-gmbh.de**).

Operation of the power-operated window

When operating the power-operated window safety instructions must be observed, specifically those pertaining to commissioning, operation and maintenance.

Help in case of Malfunctions, Repairs and Maintenance

Professional repair of a defect drive can only be performed at the manufacturer's factory or manufacturer-certified specialist company. Unauthorized opening or manipulation of the drive terminates warranty.

1. Exchange defect drives or have them repaired by the manufacturer.
2. In case of problems during installation or normal operation the following table might be useful:

Problem	Possible causes	Possible solutions
Drive does not start	• Duration of mains power supply too short	• Adjust supply voltage as specified in the technical documentation
	• Drive run direction not correct	• Check drive cables
	• Connecting cable not connected	• Check all connection cables
	• Power supply / Control Unit voltage incorrect, too high or too low (see data sheet)	• Check power supply unit and replace if necessary
	• No mains supply to power supply unit / Control Unit (no voltage)	• Connect power supply
	• Drive has shut down on overload	• First move drive in CLOSE position
Drive doesn't start after having been in operation several times	• Operating time has been exceeded, drive has been overheated	• Wait until drive has cooled down and start again
	• See possible solutions above associated with „Drive doesn't start"	• See possible solutions associated with: "Drive doesn't start"
Drive doesn't close	• Closing edge safety mechanism has been triggered	• Release safety area for operation and reset closing edge safety mechanism
	• See possible solutions above associated with „Drive doesn't start"	• See possible solutions associated with: "Drive doesn't start"
Drive travels uncontrolled in open and close direction	• Residual ripple of power supply / control unit too hight	• Adjust drive voltage to the required value of drive. (values see data sheet of drive)
	• Fault in power supply unit / control unit	• Check output voltage of power supply unit or control unit
Drive closes, but after about 10 mm the drive open	• Close the window outside the 40 mm (Soft run mode).	• Drive mounted so, that the closing process takes place within the 40 mm (e.g. use spacer under the casement bracket).

Maintenance and Modification

To ensure continuous function and safety of the drive periodic maintenance by a specialist company is required at least once a year (as mandated by law for smoke and heat exhaust systems). Operational readiness must be checked regularly. Frequent inspection of the system for imbalance and signs of wear or damages of cables and fastening elements must be performed.
During maintenance contaminations must be removed from the drive. Fastenings and clamping screws must be checked for tightness. Test runs during the opening and closing procedure of the devices must be performed.
The drive itself is maintenance-free. Defect devices may only be repaired in our factory. Only replacement parts of the manufacturer may be used. When the connection cable of this device is damaged it must be replaced by the manufacturer or his customer service or a similarly qualified person to avoid endangerment.
It is recommended to conclude a maintenance contract. A sample maintenance contract can be downloaded from the homepage of

Firm Aumüller Aumatic GmbH
(**www.aumueller-gmbh.de**).

While cleaning the windows, drives may not have direct contact with water or cleaning agents. Drives must be protected from dirt and dust during the construction phase or renovations.

Maintenance process

1. Open or extend power-operated casement completely.
2. Completely disconnect the system from the mains and secure it against automatic or manual activation.
3. Check windows and fittings for damages.
4. Check all mechanical fastenings (if required, observe information on torques in installation instructions).
5. Check electric drives for damages and contaminations.
6. Check connecting cables (drive cable) for:
   - tightness of the cable screw
   - functionality of the strain relief
   - damages
7. Check the mobility of hinges and fittings and re-adjust or apply lubricant, e.g. silicone spray (observe the instructions of the manufacturer of this window system).
8. Check peripheral seal, remove contaminations or replace.
9. Perform cleaning to maintain functionality (e.g. clean extending elements of the drive, such as chains or spindles by damp wiping them with acid or lye-free agents and drying them and, if required, lubricate them with cleansing oil e.g., Ballistol).
10. Turn on operating voltage.
11. Open and close the power-operated window via the operating voltage (functional test).
12. If available, check and re-adjust protection systems of the safe guard fixture.
13. Check the intactness of the CE label at the power-operated system (e.g. SHEV/Natural smoke and heat exhaust ventilators).
14. Check the intactness of warning instructions and labels at the respective drive.
15. Perform a risk assessment in accordance with Machinery Directive 2006 / 42 / EG, if required, e.g. after modifying the machine.

Demounting

The drives are demounted by reversing the steps, as for the installation. The adjustments are omitted.

1. Completely disconnect the system from the power supply before demounting a drive.
2. After demounting a drive the window must be secured against independent opening.

Dispose of parts according to the locally applicable legal provisions.

Disposal

According to the European Directive 2012/19 / EU on Waste Electrical and Electronic Equipment (WEEE) and its transposition into national law, obsolete electrical appliances must be collected separately and sent for environmentally friendly recycling.

Liability

We reserve the right to change or discontinue products at any time without prior notice. Illustrations are subject to change. Although we take every care to ensure accuracy, we cannot accept liability for the content of this document.

Warranty and Customer Service

In principal apply our:

„General Terms for the Supply of Products and Services of the Electrical Industry (ZVEI)".

The warranty corresponds with legal provisions and applies to the country in which the product has been acquired.
The warranty includes material and manufacturing defects incurred during normal use.

The warranty period for delivered material is twelve months.

Warranty and liability claims for personal injuries or material damages are excluded, if caused by one or more of the following:

- No proper incoming goods inspection.
- Improper use of the product.
- Improper installation, commissioning, operation, maintenance or repair of the product.
- Operating the product by defect and improper installed or not functioning safety and protection devices.
- Ignoring instructions and installation requirements in these instructions.
- Unauthorized constructional modifications at the product or accessories.
- Disaster situations due to effects of foreign bodies and Acts of God.
- Wear and tear.

Contact persons for possible warranty claims, for spare parts or accessories are the employees of the responsible branch office or the responsible person at

Firm Aumüller Aumatic GmbH.

Contact data are available at our homepage

(www.aumueller-gmbh.de)

Certificate and Declaration of Conformity

We declare under our sole responsibility that the product described under "Data sheet" is in conformity with the following directives:

- 2014/30/EU
  Directive relating to Electro-Magnetic Compatibility
- 2014/35/EU
  Low voltage Directive

CE

We further declare that the drive is an incomplete machine within the meaning of the European Machinery Directive (2006/45/EG).

Technical file and declaration at firm:

Aumüller Aumatic GmbH
Gemeindewald 11
D-86672 Thierhaupten

Ramona Meinzer
Managing Director (Chairman)

Note:

The proof of the application of a quality management system is for company:

Aumüller Aumatic GmbH

according to the certification basis **DIN EN 9001** as well the "Declaration of Incorporation and Conformity" can be accessed via the QR code or directly on our homepage:

(www.aumueller-gmbh.de)

Translation of the original instructions (German)

Important note:
We are aware of our responsibility, which is why we present life-supporting and value-preserving products with greatest possible conscientiousness. Although we make every effort to ensure that the data and information are as correct and up-to-date as possible, we still cannot guarantee that they are free from mistakes and errors.
All information and data contained in this document are subject to alterations without prior notice. Distribution and reproduction of this document as well as the use and disclosure of its content is not authorized unless expressly approved. Offenders will be held liable for the payment of damages. All rights reserved in the case of a patent award or utility model registration.
Basically the General Terms and Conditions of **Aumüller Automatic** GmbH apply to all offers, supplies and services.

The publication of these assembly and commissioning instructions supersedes all previous editions.

AUMÜLLER AUMATIC GMBH
Gemeindewald 11
86672 Thierhaupten

Tel. +49 8271 8185-0
Fax +49 8271 8185-250
info@aumueller-gmbh.de

www.aumueller-gmbh.de

9000000201_V4.3_KW11/19